EMERSON
Industrial Automation

Getting Started Guide

Commander SK

Model sizes 2 to 6

AC variable speed drive for 3 phase induction motors

Part Number: 0472-0064-08
Issue: 8

CONTROL TECHNIQUES
www.controltechniques.com

General Information

The manufacturer accepts no liability for any consequences resulting from inappropriate, negligent or incorrect installation or adjustment of the optional operating parameters of the equipment or from mismatching the variable speed drive with the motor.

The contents of this guide are believed to be correct at the time of printing. In the interests of a commitment to a policy of continuous development and improvement, the manufacturer reserves the right to change the specification of the product or its performance, or the contents of the guide, without notice.

All rights reserved. No parts of this guide may be reproduced or transmitted in any form or by any means, electrical or mechanical including photocopying, recording or by an information storage or retrieval system, without permission in writing from the publisher.

Drive software version

This product is supplied with the latest software version. If this drive is to be connected to an existing system or machine, all drive software versions should be verified to confirm the same functionality as drives of the same model already present. This may also apply to drives returned from a Control Techniques Service Centre or Repair Centre. If there is any doubt please contact the supplier of the product.

The software version of the drive can be checked by looking at Pr **11.29** and Pr **11.34**. This takes the form of xx.yy.zz where Pr **11.29** displays xx.yy and Pr **11.34** displays zz. (e.g. for software version 01.01.00, Pr **11.29** = 1.01 and Pr **11.34** displays 0).

Environmental statement

Control Techniques is committed to minimising the environmental impacts of its manufacturing operations and of its products throughout their life cycle. To this end, we operate an Environmental Management System (EMS) which is certified to the International Standard ISO 14001. Further information on the EMS, our Environmental Policy and other relevant information is available on request, or can be found at www.greendrives.com.

The electronic variable-speed drives manufactured by Control Techniques have the potential to save energy and (through increased machine/process efficiency) reduce raw material consumption and scrap throughout their long working lifetime. In typical applications, these positive environmental effects far outweigh the negative impacts of product manufacture and end-of-life disposal.

Nevertheless, when the products eventually reach the end of their useful life, they must not be discarded but should instead be recycled by a specialist recycler of electronic equipment. Recyclers will find the products easy to dismantle into their major component parts for efficient recycling. Many parts snap together and can be separated without the use of tools, whilst other parts are secured with conventional fasteners. Virtually all parts of the product are suitable for recycling.

Product packaging is of good quality and can be re-used. Large products are packed in wooden crates, while smaller products come in strong cardboard cartons which themselves have a high recycled fibre content. If not re-used, these containers can be recycled. Polythene, used on the protective film and bags for wrapping product, can be recycled in the same way. Control Techniques' packaging strategy prefers easily-recyclable materials of low environmental impact, and regular reviews identify opportunities for improvement.

When preparing to recycle or dispose of any product or packaging, please observe local legislation and best practice.

REACH legislation

EC Regulation 1907/2006 on the Registration, Evaluation, Authorisation and restriction of Chemicals (REACH) requires the supplier of an article to inform the recipient if it contains more than a specified proportion of any substance which is considered by the European Chemicals Agency (ECHA) to be a Substance of Very High Concern (SVHC) and is therefore listed by them as a candidate for compulsory authorisation.

For current information on how this requirement applies in relation to specific Control Techniques products, please approach your usual contact in the first instance. Control Techniques position statement can be viewed at:

http://www.controltechniques.com/REACH

Copyright © March 2011 Control Techniques Ltd.

Issue Number: 8

Software: 01.08.01 onwards

Contents

1 Safety Information 5

2 Product Information 9

2.1 Ratings 9
2.2 Typical short term overload limits 10
2.3 Rating Data 11
2.4 Accessories supplied with the drive 19

3 Mechanical Installation 20

3.1 Fire protection 20
3.2 Removing the terminal covers 21
3.3 Mounting methods 23
3.4 Mounting brackets 28
3.5 Enclosure 30
3.6 Electrical terminals 31

4 Electrical Installation 33

4.1 Power connections 33
4.2 Heatsink fan 38
4.3 Ground leakage 40
4.4 EMC (Electromagnetic compatibility) 42
4.5 Control terminals I/O specification 43

5 Keypad and Display 48

5.1 Programming keys 48
5.2 Control keys 48
5.3 Selecting and changing parameters 49
5.4 Saving parameters 50
5.5 Parameter access 50
5.6 Security codes 50
5.7 Setting drive back to default values 51

6 Parameters 52

6.1 Parameter descriptions - Level 1 52
6.2 Parameter descriptions - Level 2 59
6.3 Parameter descriptions - Level 3 69
6.4 Diagnostic parameters 69

7 Quick start commissioning 70

7.1 Terminal control 70
7.2 Keypad control 72

8 Diagnostics 74

9 Options 77

10 UL listing information 79

10.1 Common UL information 79
10.2 Power dependant UL information 79
10.3 AC supply specification 80
10.4 Maximum continuous output current 80
10.5 Safety label 80

Declaration of Conformity

Control Techniques Ltd, The Gro, Newtown. Powys. UK. SY16 3BE

SK2201	SK2202	SK2203	SK2401	SK2402	SK2403	SK2404
SK3201	SK3202	SK3401	SK3402	SK3403		
SK3501	SK3502	SK3503	SK3504	SK3505	SK3506	SK3507
SK4201	SK4202	SK4203	SK4401	SK4402	SK4403	
SK4601	SK4602	SK4603	SK4604	SK4605	SK4606	
SK5401	SK5402	SK5601	SK5602			
SK6401	SK6402	SK6601	SK6602			

The AC variable speed drive products listed above have been designed and manufactured in accordance with the following European harmonized standards:

EN 61800-5-1:2007	Adjustable speed electrical power drive systems - safety requirements - electrical, thermal and energy
EN 61800-3:2004	Adjustable speed electrical power drive systems. EMC product standard including specific test methods
EN 61000-6-2:2005	Electromagnetic compatibility (EMC). Generic standards. Immunity standard for industrial environments
EN 61000-6-4:2007*	Electromagnetic compatibility (EMC). Generic standards. Emission standard for industrial environments
EN 61000-3-2:2006[1]**	Electromagnetic compatibility (EMC). Limits. Limits for harmonic current emissions (equipment input current up to and including 16 A per phase)
EN 61000-3-3:2008**	Electromagnetic compatibility (EMC). Limits. Limitation of voltage fluctuations and flicker in low-voltage supply systems for equipment with rated current <= 16 A

* Applicable to sizes 2 to 4 only.

** Applicable to size 2 only.

[1] These products are for professional use, and power input exceeds 1kW for all models, so no limits apply.

These products comply with the Low Voltage Directive 2006/95/EC and the Electromagnetic Compatibility Directive 2004/108/EC.

T. Alexander
Executive VP Technology
Date: 26th May 2009

These electronic drive products are intended to be used with appropriate motors, controllers, electrical protection components and other equipment to form complete end products or systems. Compliance with safety and EMC regulations depends upon installing and configuring drives correctly, including using the specified input filters. The drives must be installed only by professional assemblers who are familiar with requirements for safety and EMC. The assembler is responsible for ensuring that the end product or system complies with all the relevant laws in the country where it is to be used. Refer to the *Technical Data Guide*. An EMC Data Sheet is also available giving detailed EMC information.

1 Safety Information

1.1 Warnings, Cautions and Notes

WARNING

A **Warning** contains information, which is essential for avoiding a safety hazard.

CAUTION

A **Caution** contains information, which is necessary for avoiding a risk of damage to the product or other equipment.

NOTE A **Note** contains information which helps to ensure correct operation of the product.

1.2 Electrical safety - general warning

The voltages used in the drive can cause severe electrical shock and/or burns, and could be lethal. Extreme care is necessary at all times when working with or adjacent to the drive.

Specific warnings are given at the relevant places in this Guide.

1.3 System design and safety of personnel

The drive is intended as a component for professional incorporation into complete equipment or system. If installed incorrectly, the drive may present a safety hazard.

The drive uses high voltages and currents, carries a high level of stored electrical energy, and is used to control equipment which can cause injury.

System design, installation, commissioning / start-up and maintenance must be carried out by personnel who have the necessary training and experience. They must read this safety information and this guide carefully.

The STOP and START controls or electrical inputs of the drive must not be relied upon to ensure safety of personnel. They do not isolate dangerous voltages from the output of the drive or from any external option unit. The supply must be disconnected by an approved electrical isolation device before gaining access to the electrical connections.

The drive is not intended to be used for safety-related functions.

Careful consideration must be given to the function of the drive which might result in a hazard, either through its intended behaviour or through incorrect operation due to a fault. In any application where a malfunction of the drive or its control system could lead to or allow damage, loss or injury, a risk analysis must be carried out, and where necessary, further measures taken to reduce the risk - for example, an over-speed protection device in case of failure of the speed control, or a fail-safe mechanical brake in case of loss of motor braking.

1.4 Environmental limits

Instructions within the supplied data and information within the *Commander SK Technical Data Guide* regarding transport, storage, installation and the use of the drive must be complied with, including the specified environmental limits. Drives must not be subjected to excessive physical force.

1.5 Access

Access must be restricted to authorized personnel only. Safety regulations which apply at the place of use must be complied with.

The IP (Ingress Protection) rating of the drive is installation dependant. For further information, refer to the *Commander SK Technical Data Guide*.

1.6 Fire protection

The drive enclosure is not classified as a fire enclosure. A separate fire enclosure must be provided. For further information, refer to section 3.1 *Fire protection* on page 20.

1.7 Compliance with regulations

The installer is responsible for complying with all relevant regulations, such as national wiring regulations, accident prevention regulations and electromagnetic compatibility (EMC) regulations. Particular attention must be given to the cross-sectional areas of conductors, the selection of fuses and other protection, and protective ground (earth) connections.

The *Commander SK Technical Data Guide* contains instructions for achieving compliance with specific EMC standards.

Within the European Union, all machinery in which this product is used must comply with the following directives:

2006/42/EC: Safety of machinery

2004/108/EC: Electromagnetic compatibility

1.8 Motor

Ensure the motor is installed in accordance with the manufacturer's recommendations. Ensure the motor shaft is not exposed.

Standard squirrel cage induction motors are designed for single speed operation. If it is intended to use the capability of a drive to run a motor at speeds above its designed maximum, it is strongly recommended that the manufacturer is consulted first.

Low speeds may cause the motor to overheat because the cooling fan becomes less effective. The motor should be installed with a protection thermistor. If necessary, an electric force vent fan should be used.

The values of the motor parameters set in the drive affect the protection of the motor. The default values in the drive should not be relied upon.

It is essential that the correct value is entered into parameter **06**, motor rated current. This affects the thermal protection of the motor.

1.9 Mechanical brake control

The brake control functions are provided to allow well co-ordinated operation of an external brake with the drive. While both hardware and software are designed to high standards of quality and robustness, they are not intended for use as safety functions, i.e. where a fault or failure would result in a risk of injury. In any application where the incorrect operation of the brake release mechanism could result in injury, independent protection devices of proven integrity must also be incorporated.

1.10 Adjusting parameters

Some parameters have a profound effect on the operation of the drive. They must not be altered without careful consideration of the impact on the controlled system. Measures must be taken to prevent unwanted changes due to error or tampering.

1.11 Electrical installation

1.11.1 Electric shock risk

The voltages present in the following locations can cause severe electric shock and may be lethal:

- AC supply cables and connections
- DC bus, dynamic brake cables and connections
- Output cables and connections
- Many internal parts of the drive, and external option units

Unless otherwise indicated, control terminals are single insulated and must not be touched.

1.11.2 Isolation device

The AC supply must be disconnected from the drive using an approved isolation device before any cover is removed from the drive or before any servicing work is performed.

1.11.3 STOP function

The STOP function does not remove dangerous voltages from the drive, the motor or any external option units.

1.11.4 Stored charge

The drive contains capacitors that remain charged to a potentially lethal voltage after the AC supply has been disconnected. If the drive has been energized, the AC supply must be isolated at least ten minutes before work may continue.

Normally, the capacitors are discharged by an internal resistor. Under certain, unusual fault conditions, it is possible that the capacitors may fail to discharge, or be prevented from being discharged by a voltage applied to the output terminals. If the drive has failed in a manner that causes the display to go blank immediately, it is possible the capacitors will not be discharged. In this case, consult Control Techniques or their authorized distributor.

1.11.5 Equipment supplied by plug and socket

Special attention must be given if the drive is installed in equipment which is connected to the AC supply by a plug and socket. The AC supply terminals of the drive are connected to the internal capacitors through rectifier diodes which are not intended to give safety isolation. If the plug terminals can be touched when the plug is disconnected from the socket, a means of automatically isolating the plug from the drive must be used (e.g. a latching relay).

1.11.6 Ground leakage current

The drive is supplied with an internal EMC filter capacitor installed. If the input voltage to the drive is supplied through an ELCB or RCD, these may trip due to the ground leakage current. See section 4.3.1 *Internal EMC filter* on page 40 for further information and how to disconnect the internal EMC capacitor.

1.12 Mechanical installation

1.12.1 Lifting the drive

The weights of the model sizes 4, 5 and 6 are as follows:

Size 4: 30kg (66lbs)

Size 5: 55kg (121lbs)

Size 6: 75kg (165lbs)

Use appropriate safeguards when lifting these models.

2 Product Information

2.1 Ratings

Commander SK sizes 2 to 6 are dual rated.

The setting of the motor rated current determines which rating applies - Heavy Duty or Normal Duty.

The two ratings are compatible with motors designed to IEC 60034.

The following graph illustrates the difference between Normal Duty and Heavy Duty with respect to continuous current rating and short term overload limits.

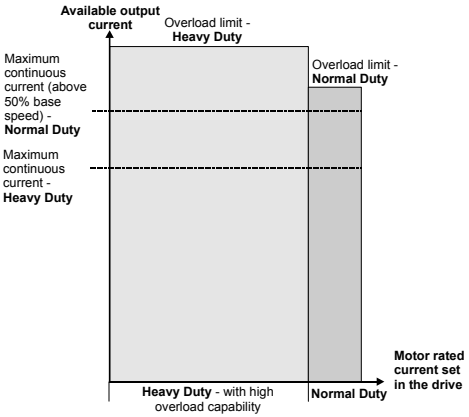

Normal Duty	Heavy Duty (default)
For applications which use self ventilated induction motors and require a low overload capability (e.g. fans, pumps). Self ventilated induction motors require increased protection against overload due to the reduced cooling effect of the fan at low speed. To provide the correct level of protection the I^2t software operates at a level which is speed dependent. This is illustrated in the graph below. **NOTE** The speed at which the low speed protection takes effect can be changed by the setting of Pr **4.25**. The protection starts when the motor speed is below 15% of base speed when Pr **4.25** = 0 (default) and below 50% when Pr **4.25** = 1. See Menu 4 in the *Commander SK Advanced User Guide* for further details.	For constant torque applications or applications which require a high overload capability (e.g. cranes, hoists). The thermal protection is set to protect force ventilated induction motors by default. **NOTE** If the application uses a self ventilated motor and increased thermal protection is required for speeds below 50% base speed, then this can be enabled by setting Pr **4.25** = 1. See Menu 4 in the *Commander SK Advanced User Guide* for further details.

Operation of motor I^2t protection (It.AC trip)	*Operation of motor I^2t protection (It.AC trip)*
Motor I^2t protection is fixed as shown below and is compatible with: • Self ventilated induction motors	Motor I^2t protection defaults to be compatible with: • Forced ventilation induction motors
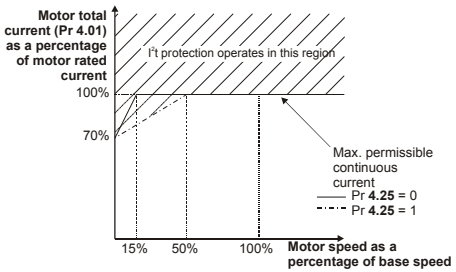	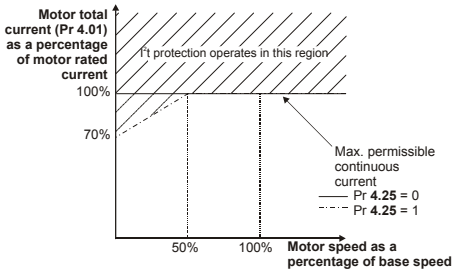

2.2 Typical short term overload limits

The maximum percentage overload limit changes depending on the induction motor only. Variations in motor rated current, motor rated power factor and motor leakage inductance all result in changes in the maximum possible overload. The exact value for a specific motor can be calculated using the equations detailed in Menu 4 in the *Commander SK Advanced User Guide*.

Table 2-1 Typical overload limits for size 2 to 5 (peak current)

	From cold	From 100% full load
Normal Duty overload with motor rated current = drive rated current	110% for 215s	110% for 5s
Heavy Duty overload with motor rated current = drive rated current	150% for 60s	150% for 8s

Table 2-2 Typical overload limits for size 6 (peak current)

	From cold	From 100% full load
Normal Duty overload with motor rated current = drive rated current	110% for 165s	110% for 9s
Heavy Duty overload with motor rated current = drive rated current	129% for 97s	129% for 15s

Generally the drive rated current is higher than the matching motor rated current allowing a higher level of overload than the default setting.
The time allowed in the overload region is proportionally reduced at very low output frequency on some drive ratings.

NOTE The maximum overload level which can be attained is independent of the speed.

NOTE The output frequency can be increased by 20% during deceleration.

2.3 Rating Data

Figure 2-1 Model code explanation

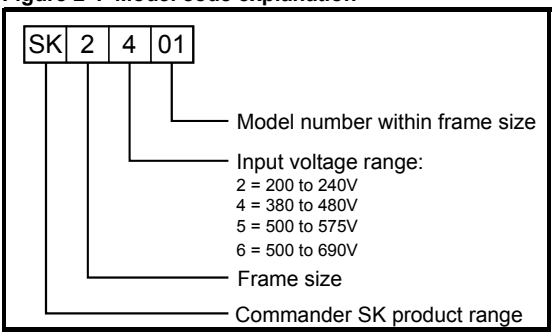

NOTE The nominal motor power kW ratings stated are at 220V, 400V, 575V and 690V. However, the nominal motor power hp ratings stated are at 230V, 460V, 575V and 690V.

Table 2-3 Commander SK2, 200V drive, 3 phase, 200 to 240Vac ±10%, 48 to 65Hz units

Model number	Normal Duty			Heavy Duty			
	Nominal motor power		100% RMS output current	Nominal motor power		100% RMS output current	Peak current
	kW	hp	A	kW	hp	A	A
SK2201	4.0	5.0	15.5	3.0	3.0	12.6	18.9
SK2202	5.5	7.5	22	4.0	5.0	17	25.5
SK2203	7.5	10	28	5.5	7.5	25	37.5

Model number	Typical full load input current*	Maximum continuous input current*	European input fuse rating IEC gG	USA Input fuse rating Class CC <30A Class J >30A	Minimum braking resistor value	Instantaneous power rating
	A	A	A	A	Ω	kW
SK2201	13.4	18.1	20	20	18	8.9
SK2202	18.2	22.6	25	25		
SK2203	24.2	28.3	32	30		

* These are Normal Duty values.
Refer to Table 2-1 for typical overload limits for Size 2 to 5.

Table 2-4 Commander SK2, 400V drive, 3 phase, 380 to 480Vac ±10%, 48 to 65Hz units

Model Number	Normal Duty			Heavy Duty			
	Nominal motor power		100% RMS output current	Nominal motor power		100% RMS output current	Peak current
	kW	hp	A	kW	hp	A	A
SK2401	7.5	10	15.3	5.5	7.5	13	19.5
SK2402	11	15	21	7.5	10	16.5	24.7
SK2403	15	20	29	11	20	25	34.5
SK2404				15	20	29	43.5

Model Number	Typical full load input current*	Maximum continuous input current*	European input fuse rating IEC gG	USA Input fuse rating Class CC <30A Class J >30A	Minimum braking resistor value	Instantaneous power rating
	A	A	A	A	Ω	kW
SK2401	15.7	17	20	20	19	33.1
SK2402	20.2	21.4	25	25		
SK2403	26.6	27.6	32	30		
SK2404	26.6	27.6	32	30		

Table 2-5 Commander SK3, 200V drive, 3 phase, 200 to 240Vac ±10%, 48 to 65Hz units

Model Number	Normal Duty			Heavy Duty			
	Nominal motor power		100% RMS output current	Nominal motor power		100% RMS output current	Peak current
	kW	hp	A	kW	hp	A	A
SK3201	11	15	42	7.5	10	31	46.5
SK3202	15	20	54	11	15	42	63

Model Number	Typical full load input current*	Maximum continuous input current*	European input fuse rating IEC gG	USA Input fuse rating Class CC <30A Class J >30A	Minimum braking resistor value	Instantaneous power rating
	A	A	A	A	Ω	kW
SK3201	35.4	43.1	50	45	5	30.3
SK3202	46.8	54.3	63	60		

Table 2-6 Commander SK3, 400V drive, 3 phase, 380 to 480Vac ±10%, 48 to 65Hz units

Model Number	Normal Duty			Heavy Duty			
	Nominal motor power		100% RMS output current	Nominal motor power		100% RMS output current	Peak current
	kW	hp	A	kW	hp	A	A
SK3401	18.5	25	35	15	25	32	48
SK3402	22	30	43	18.5	30	40	60
SK3403	30	40	56	22	30	46	69

Model Number	Typical full load input current*	Maximum continuous input current*	European input fuse rating IEC gG	USA Input fuse rating Class CC <30A Class J >30A	Minimum braking resistor value	Instantaneous power rating
	A	A	A	A	Ω	kW
SK3401	34.2	36.2	40	40	18	35.5
SK3402	40.2	42.7	50	45		
SK3403	51.3	53.5	63	60		

Table 2-7 Commander SK3, 575V drive, 3 phase, 500 to 575Vac ±10%, 48 to 65Hz units

Model Number	Normal Duty			Heavy Duty			
	Nominal motor power		100% RMS output current	Nominal motor power		100% RMS output current	Peak current
	kW	hp	A	kW	hp	A	A
SK3501	3.0	3.0	5.4	2.2	2.0	4.1	6.1
SK3502	4.0	5.0	6.1	3.0	3.0	5.4	8.1
SK3503	5.5	7.5	8.4	4.0	5.0	6.1	9.1
SK3504	7.5	10	11	5.5	7.5	9.5	14.2
SK3505	11	15	16	7.5	10	12	18
SK3506	15	20	22	11	15	18	27
SK3507	18.5	25	27	15	20	22	33

Model Number	Typical full load input current*	Maximum continuous input current*	European input fuse rating IEC gG	USA Input fuse rating Class CC <30A Class J = 30A	Minimum braking resistor value	Instantaneous power rating
	A	A	A	A	Ω	kW
SK3501	5.0	6.7	8	10	18	50.7
SK3502	6.0	8.2	10	10		
SK3503	7.8	11.1	12	15		
SK3504	9.9	14.4	16	15		
SK3505	13.8	18.1	20	20		
SK3506	18.2	22.2	25	25		
SK3507	22.2	26	32	30		

Table 2-8 Commander SK4, 200V drive, 3 phase, 200 to 240Vac ±10%, 48 to 65Hz units

Model number	Normal Duty			Heavy Duty			
	Nominal motor power		100% RMS output current	Nominal motor power		100% RMS output current	Peak current
	kW	hp	A	kW	hp	A	A
SK4201	18.5	25	68	15	20	56	84
SK4202	22	30	80	18.5	25	68	102
SK4203	30	40	104	22	30	80	120

Model number	Typical full load input current*	Maximum continuous input current*	Fuse option 1		Fuse option 2**		Minimum braking resistor value	Instantaneous power rating
			European input fuse rating IEC gR	USA Input fuse rating Ferraz HSJ	HRC IEC class gG UL class J	Semi-conductor IEC class aR		
	A	A	A	A	A	A	Ω	kW
SK4201	62.1	68.9	100	90	90	160	5	30.3
SK4202	72.1	78.1	100	100	100	160		
SK4203	94.5	99.9	125	125	125	200		

Table 2-9 Commander SK4, 400V drive, 3 phase, 380 to 480Vac ±10%, 48 to 65Hz units

Model number	Normal Duty			Heavy Duty			
	Nominal motor power		100% RMS output current	Nominal motor power		100% RMS output current	Peak current
	kW	hp	A	kW	hp	A	A
SK4401	37	50	68	30	50	60	90
SK4402	45	60	83	37	60	74	111
SK4403	55	75	104	45	75	96	144

Model number	Typical full load input current*	Maximum continuous input current*	Fuse option 1		Fuse option 2**		Minimum braking resistor value	Instantaneous power rating
			European input fuse rating IEC gR	USA Input fuse rating Ferraz HSJ	HRC IEC class gG UL class J	Semi-conductor IEC class aR		
	A	A	A	A	A	A	Ω	kW
SK4401	61.2	62.3	80	80	80	160	11	55.3
SK4402	76.3	79.6	110	110	100	200		
SK4403	94.1	97.2	125	125	125	200	9	67.6

* These are Normal Duty values.

** Semi conductor fuse in series with HRC fuse or circuit breaker.

NOTE The Commander SK size 4 to 6 cannot be used on single-phase supplies due to the half-controlled input stage on these drives.

Table 2-10 Commander SK4, 575V drive, 3 phase, 500 to 575Vac ±10%, 48 to 65Hz units

Model number	Normal Duty			Heavy Duty			
	Nominal motor power		100% RMS output current	Nominal motor power		100% RMS output current	Peak current
	kW	hp	A	kW	hp	A	A
SK4603	22	30	36	18.5	25	27	40.5
SK4604	30	40	43	22	30	36	54
SK4605	37	50	52	30	40	43	64.5
SK4606	45	60	62	37	50	52	78

Model number	Typical full load input current*	Maximum continuous input current*	Fuse option 1		Fuse option 2**		Minimum braking resistor value	Instantaneous power rating
			European input fuse rating IEC gR	USA Input fuse rating Ferraz HSJ	HRC IEC class gG UL class J	Semi-conductor IEC class aR		
	A	A	A	A	A	A	Ω	kW
SK4603	32.9	35.1	63	60	50	125	13	95
SK4604	39	41						
SK4605	46.2	47.9			63			
SK4606	55.2	56.9	80					

Table 2-11 Commander SK4, 690V drive, 3 phase, 500 to 690Vac ±10%, 48 to 65Hz units

Model number	Normal Duty			Heavy Duty			
	Nominal motor power		100% RMS output current	Nominal motor power		100% RMS output current	Peak current
	kW	hp	A	kW	hp	A	A
SK4601	18.5	25	22	15	20	19	27
SK4602	22	30	27	18.5	25	22	33
SK4603	30	40	36	22	30	27	40.5
SK4604	37	50	43	30	40	36	54
SK4605	45	60	52	37	50	43	64.5
SK4606	55	75	62	45	60	52	78

Model number	Typical full load input current*	Maximum continuous input current*	Fuse option 1		Fuse option 2**		Minimum braking resistor value	Instantaneous power rating
			European input fuse rating IEC gR	USA Input fuse rating Ferraz HSJ	HRC IEC class gG UL class J	Semi-conductor IEC class aR		
	A	A	A	A	A	A	Ω	kW
SK4601	23	26.5	63	60	32	125	13	95
SK4602	26.1	28.8			40			
SK4603	32.9	35.1			50			
SK4604	39	41						
SK4605	46.2	47.9			63			
SK4606	55.2	56.9	80					

Table 2-12 Commander SK5, 400V drive, 3 phase, 380 to 480Vac ±10%, 48 to 65Hz units

Model number	Normal Duty			Heavy Duty			
	Nominal motor power		100% RMS output current	Nominal motor power		100% RMS output current	Peak current
	kW	hp	A	kW	hp	A	A
SK5401	75	100	138	55	100	124	186
SK5402	90	125	168	75	125	156	234

Model number	Typical full load input current*	Maximum continuous input current*	Fuse option 1		Fuse option 2**		Minimum braking resistor value	Instantaneous power rating
			European input fuse rating IEC gR	USA Input fuse rating Ferraz HSJ	HRC IEC class gG UL class J	Semi-conductor IEC class aR		
	A	A	A	A	A	A	Ω	kW
SK5401	126	131	200	175	160	200	7	86.9
SK5402	152	156	250	225	200	250		

Table 2-13 Commander SK5, 575V drive, 3 phase, 500 to 575Vac ±10%, 48 to 65Hz units

Model number	Normal Duty			Heavy Duty			
	Nominal motor power		100% RMS output current	Nominal motor power		100% RMS output current	Peak current
	kW	hp	A	kW	hp	A	A
SK5601	55	75	84	45	60	63	93
SK5602	75	100	99	55	75	85	126

Model number	Typical full load input current*	Maximum continuous input current*	Fuse option 1		Fuse option 2**		Minimum braking resistor value	Instantaneous power rating
			European input fuse rating IEC gR	USA Input fuse rating Ferraz HSJ	HRC IEC class gG UL class J	Semi-conductor IEC class aR		
	A	A	A	A	A	A	Ω	kW
SK5601	75.5	82.6	125	100	90	160	10	125.4
SK5602	89.1	94.8			125			

* These are Normal Duty values.
** Semi conductor fuse in series with HRC fuse or circuit breaker.

Table 2-14 Commander SK5, 690V drive, 3 phase, 500 to 690Vac ±10%, 48 to 65Hz units

Model number	Normal Duty			Heavy Duty			
	Nominal motor power		100% RMS output current	Nominal motor power		100% RMS output current	Peak current
	kW	hp	A	kW	hp	A	A
SK5601	75	100	84	55	75	63	93
SK5602	90	125	99	75	100	85	126

Model number	Typical full load input current*	Maximum continuous input current*	Fuse option 1		Fuse option 2**		Minimum braking resistor value	Instantaneous power rating
			European input fuse rating IEC gR	USA Input fuse rating Ferraz HSJ	HRC IEC class gG UL class J	Semi-conductor IEC class aR		
	A	A	A	A	A	A	Ω	kW
SK5601	75.5	82.6	125	100	90	160	10	125.4
SK5602	89.1	94.8			125			

Table 2-15 Commander SK6, 400V drive, 3 phase, 380 to 480Vac ±10%, 48 to 65Hz units

Model number	Normal Duty			Heavy Duty			
	Nominal motor power		100% RMS output current	Nominal motor power		100% RMS output current	Peak current
	kW	hp	A	kW	hp	A	A
SK6401	110	150	205	90	150	180	231
SK6402	132	200	236	110	150	210	270

Model number	Typical full load input current*	Maximum continuous input current*	Fuse option 1		Fuse option 2**		Minimum braking resistor value	Instantaneous power rating
			European input fuse rating IEC gR	USA Input fuse rating Ferraz HSJ	HRC IEC class gG UL class J	Semi-conductor IEC class aR		
	A	A	A	A	A	A	Ω	kW
SK6401	224	241	315	300	250	315	5	121.7
SK6402	247	266	315	300	300	350		

Table 2-16 Commander SK6, 575V drive, 3 phase, 500 to 575Vac ±10%, 48 to 65Hz units

Model number	Normal Duty			Heavy Duty			
	Nominal motor power		100% RMS output current	Nominal motor power		100% RMS output current	Peak current
	kW	hp	A	kW	hp	A	A
SK6601	90	125	125	75	100	100	128
SK6602	110	150	144	90	125	125	160

Model number	Typical full load input current*	Maximum continuous input current*	Fuse option 1		Fuse option 2**		Minimum braking resistor value	Instantaneous power rating
			European input fuse rating IEC gR	USA Input fuse rating Ferraz HSJ	HRC IEC class gG UL class J	Semi-conductor IEC class aR		
	A	A	A	A	A	A	Ω	kW
SK6601	128	138	200	200	200	200	10	125.4
SK6602	144	156						

Table 2-17 Commander SK6, 690V drive, 3 phase, 500 to 690Vac ±10%, 48 to 65Hz units

Model number	Normal Duty			Heavy Duty			
	Nominal motor power		100% RMS output current	Nominal motor power		100% RMS output current	Peak current
	kW	hp	A	kW	hp	A	A
SK6601	110	150	125	90	125	100	128
SK6602	132	175	144	110	150	125	160

Model number	Typical full load input current*	Maximum continuous input current*	Fuse option 1		Fuse option 2**		Minimum braking resistor value	Instantaneous power rating
			European input fuse rating IEC gR	USA Input fuse rating Ferraz HSJ	HRC IEC class gG UL class J	Semi-conductor IEC class aR		
	A	A	A	A	A	A	Ω	kW
SK6601	128	138	200	200	200	200	10	125.4
SK6602	144	156						

* These are Normal Duty values.

** Semi conductor fuse in series with HRC fuse or circuit breaker.

Refer to Table 2-2 for typical overload limits for Size 6.

2.4 Accessories supplied with the drive

The following accessories are supplied with the drive in the Accessory Kit Box:

Table 2-18 Parts supplied with the drive

Description	Size 2	Size 3	Size 4	Size 5	Size 6
UL warning label			CAUTION Risk of Electric Shock Power down unit 10minutes before removing cover		
Grounding bracket					
Through panel mounting gasket					
Through panel mounting bracket					
Surface mounting brackets					
Top surface mounting brackets					
Nylon washers	M6	M6	M8 M6		
Sealing clips					
Grounding clamp					
Ground cable bridge					
DC terminal cover grommets					
Ferrite ring					
Supply and motor connector					
M5 nuts					
Fan supply connector					
IP54 insert					

3 Mechanical Installation

WARNING

The drive is intended to be mounted in an enclosure which prevents access except by trained and authorized personnel, and which prevents the ingress of contamination. It is designed for use in an environment classified as pollution degree 2 in accordance with IEC 60664-1. This means that only dry, non-conducting contamination is acceptable.

3.1 Fire protection

The drive enclosure is not classified as a fire enclosure. A separate fire enclosure must be provided.

For installation in the USA, a NEMA 12 enclosure is suitable.

For installation outside the USA, the following (based on IEC 62109-1, standard for PV inverters) is recommended.

Enclosure can be metal and/or polymeric, polymer must meet requirements which can be summarised for larger enclosures as using materials meeting at least UL 94 class 5VB at the point of minimum thickness.

Air filter assemblies to be at least class V-2.

The location and size of the bottom shall cover the area shown in Figure 3-1. Any part of the side which is within the area traced out by the 5° angle is also considered to be part of the bottom of the fire enclosure.

Figure 3-1 Fire enclosure bottom layout

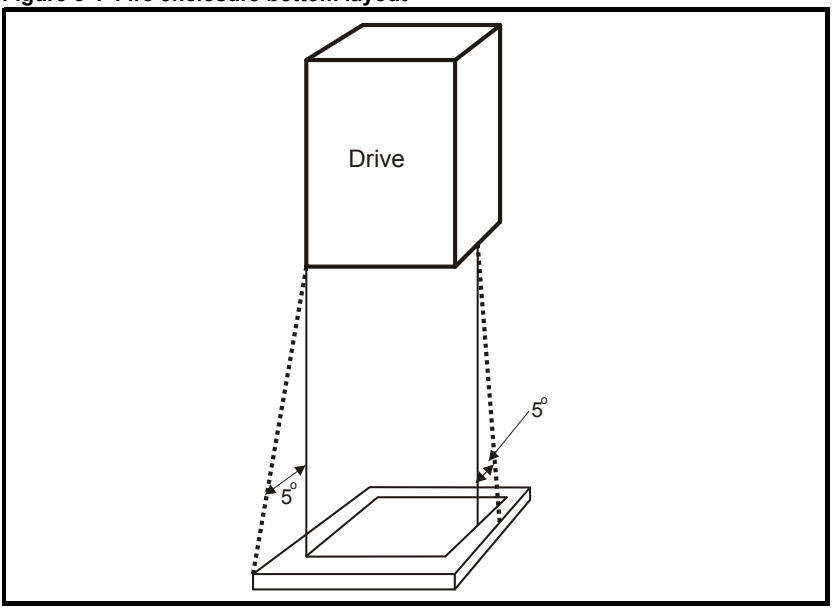

The bottom, including the part of the side considered to be part of the bottom, must be designed to prevent escape of burning material - either by having no openings or by having a baffle construction. This means that openings for cables etc. must be sealed with materials meeting the 5VB requirement, or else have a baffle above.

See Figure 3-2 for acceptable baffle construction. This does not apply for mounting in an enclosed electrical operating area (restricted access) with concrete floor.

Figure 3-2 Fire enclosure baffle construction

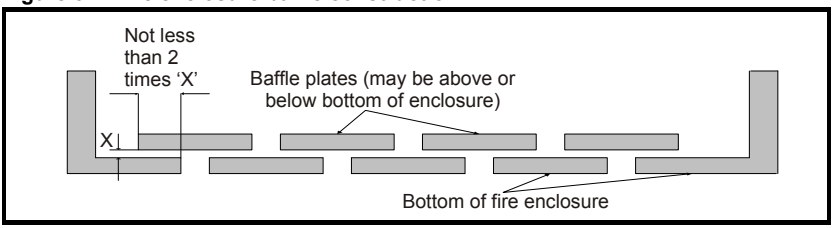

3.2 Removing the terminal covers

To remove a terminal cover, undo the screw and lift the terminal cover off as shown. When replacing the terminal covers, the screws should be tightened with a maximum torque of 0.8Nm (0.6 lb ft) for the control terminal cover and 1Nm (0.7 lb ft) for the other covers.

Figure 3-3 Removing the control stage terminal cover

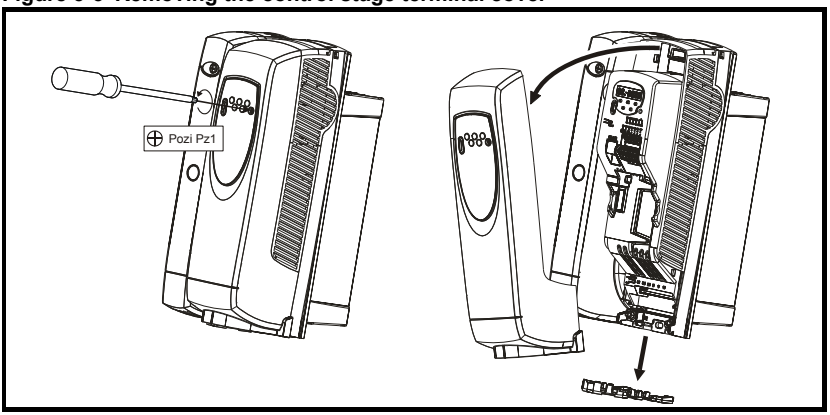

Figure 3-4 Removing the power stage terminal covers

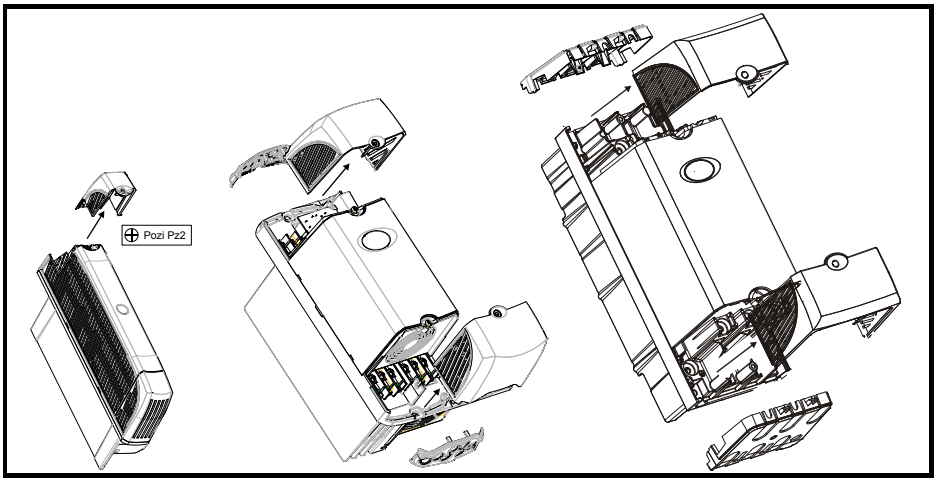

Figure 3-5 Removing the finger-guard and DC terminal cover break-outs

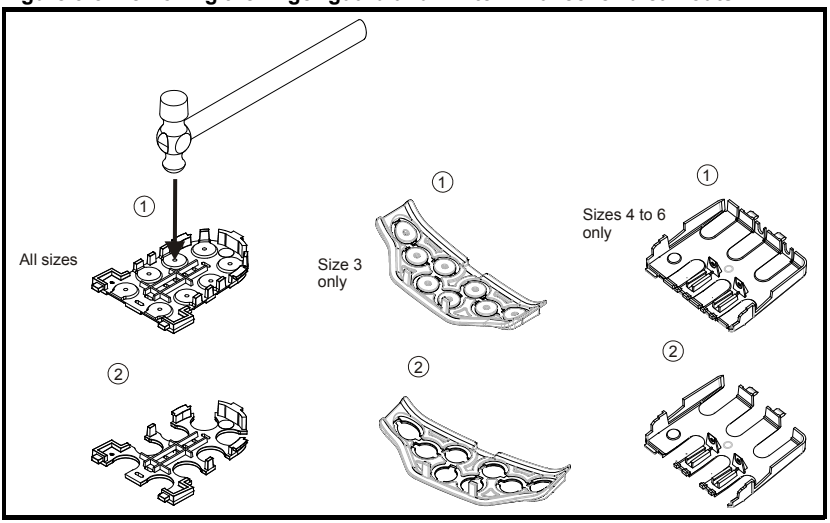

Place finger-guard on a solid flat surface and hit relevant break-outs with hammer as shown (1). Continue until all required break-outs are removed (2). Remove any sharp edges once break-outs are removed.

Figure 3-6 Size 4 to 6 finger-guard grommets

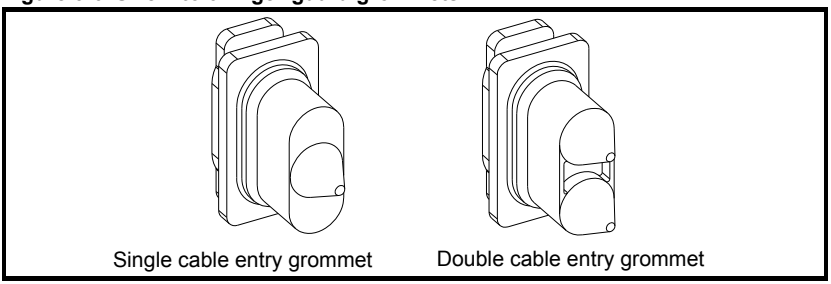

The grommets are available as a kit of four grommets under the following part numbers:

9500-0074 Kit of four single entry grommets

9500-0075 Kit of four double entry grommets

If the break-outs are removed from the finger-guard, then the grommets are required for Commander SK size 4 to 6 to meet the IP20 standard.

Figure 3-7 Removing the terminal cover break-outs

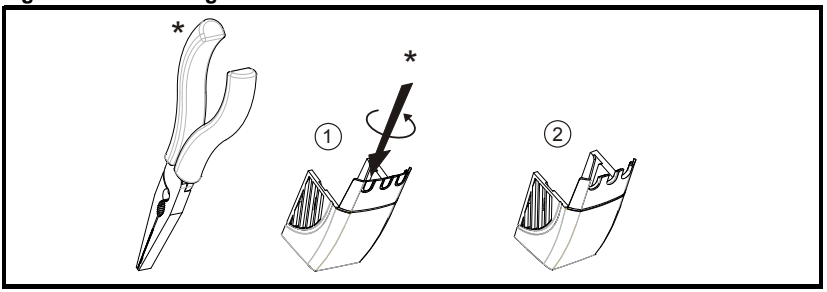

Grasp the DC terminal cover break-outs with pliers as shown (1) and twist to remove. Continue until all required break-outs are removed. Remove any sharp edges once the break-outs are removed (2). Use the DC terminal cover grommets supplied in the accessory box (Table 2-18 on page 19) to maintain the seal at the top of the drive.

3.3 Mounting methods

The Commander SK can be either surface or through-panel mounted using the appropriate brackets.

WARNING

If the drive has been used at high load levels for a period of time, the heatsink can reach temperatures in excess of 70°C (158°F). Human contact with the heatsink should be prevented.

3.3.1 Surface mounting

Figure 3-8 Surface mounting the size 2 drive

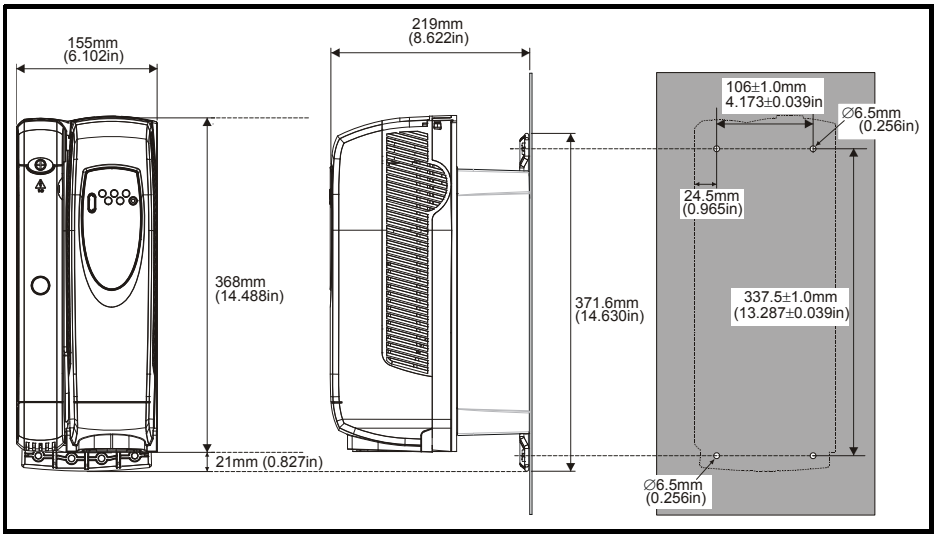

Figure 3-9 Surface mounting the size 3 drive

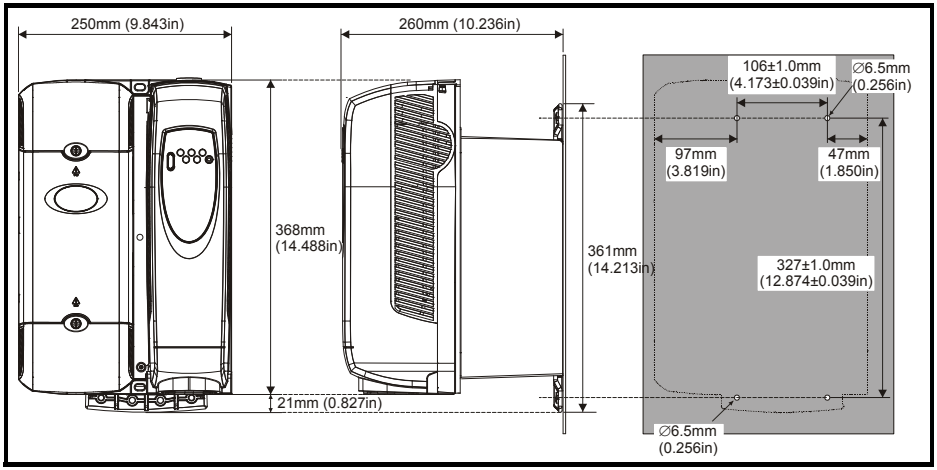

Figure 3-10 Surface mounting the size 4 drive

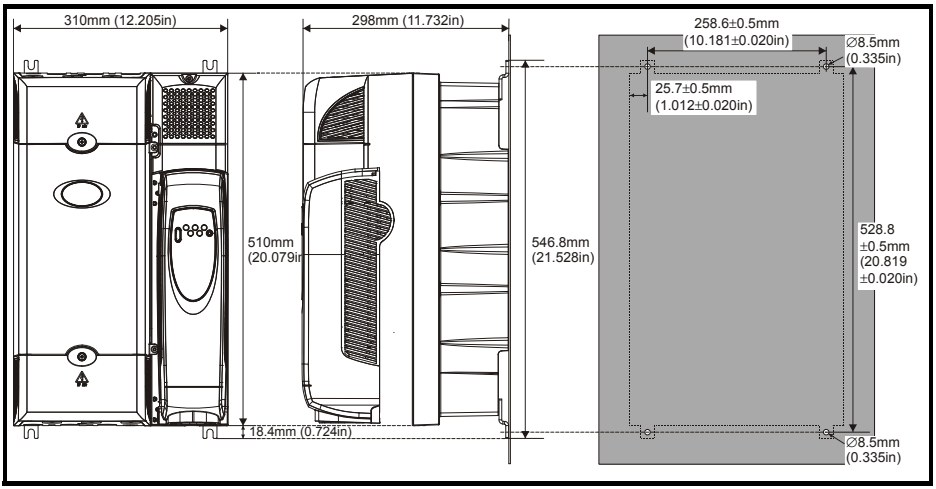

Figure 3-11 Surface mounting the size 5 drive

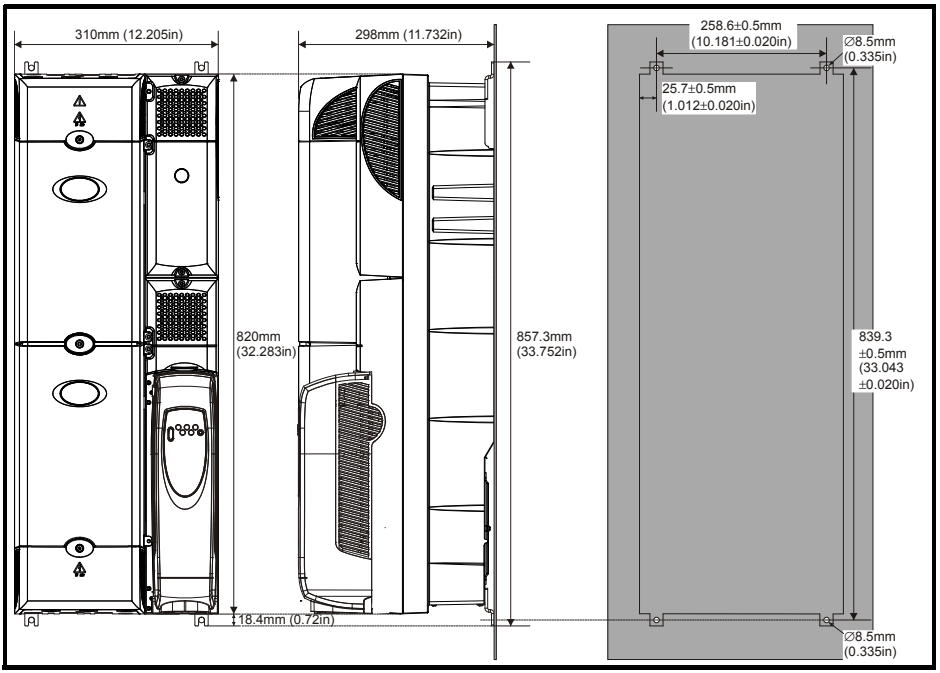

Figure 3-12 Surface mounting the size 6 drive

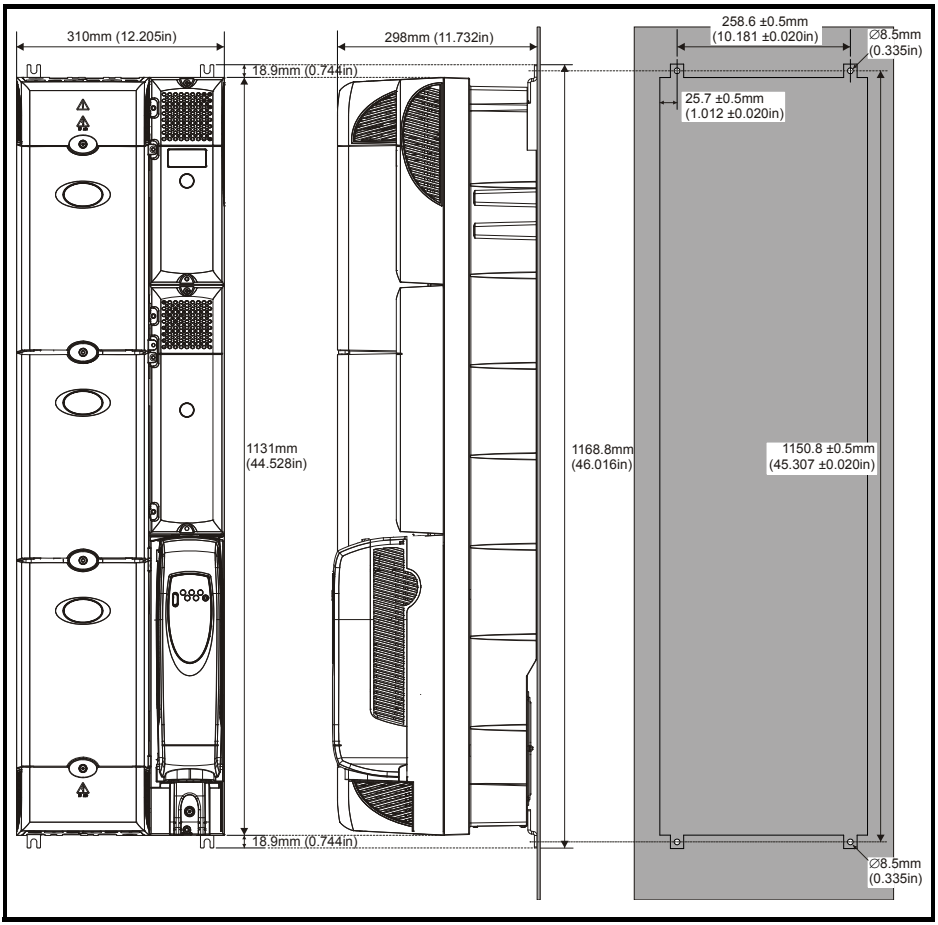

3.3.2 Through-panel mounting

See the *Commander SK Technical Data Guide.*

3.3.3 Mounting with Conduit Boxes

See the *Commander SK Technical Data Guide.*

3.3.4 Minimum mounting clearances

Figure 3-13 Minimum mounting clearances

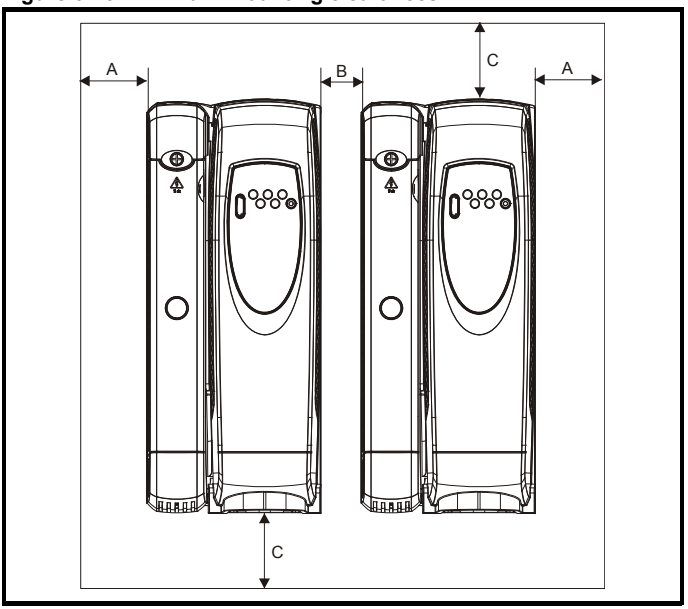

Drive size	A		B		C	
	mm	in	mm	in	mm	in
2 to 6	30	1.18	30*	1.18*	100	3.94

*This is the minimum spacing between drives measured at the base of the drives where it is mounted against a back plate/flat surface.

3.4 Mounting brackets

Table 3-1 Mounting brackets

Model size	Surface	Through-panel	Hole size
2	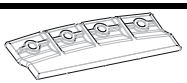 x2	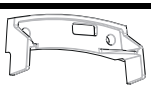 x1	6.5mm (0.256in)
3	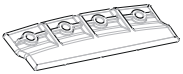 x2		
4	x4		8.5mm (0.335in)
5 & 6	x4		
	x2		

NOTE To avoid damaging the through-panel mounting bracket when through-panel mounting a size 2, the through-panel mounting bracket should be used to fix the top of the drive to the back plate before the bottom of the drive is fixed to the back plate. The tightening torque should be 4Nm (2.9 lb ft).

3.4.1 Fitting of the Commander SK mounting brackets on size 4, 5 and 6

Commander SK size 4, 5 and 6 use the same mounting brackets for surface and through-panel mounting.

The mounting bracket has a long section and short section.

Figure 3-14 Size 4, 5 and 6 mounting bracket

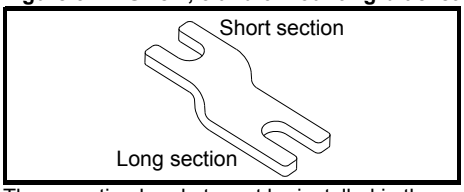

The mounting bracket must be installed in the correct orientation with the long section inserted into or attached to the drive and the short section attached to the backplate. Figure 3-15 shows the orientation of the mounting bracket when the drive is surface mounted and through-panel mounted.

Figure 3-15 Orientation of the size 4, 5 and 6 mounting bracket

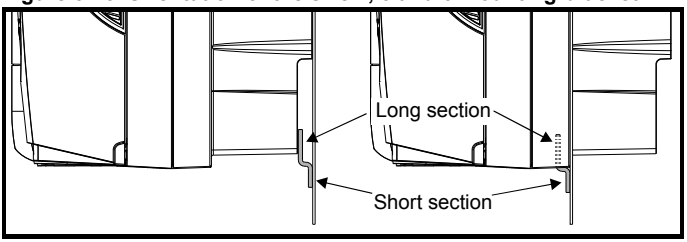

Commander SK size 5 and 6 also requires two top mounting brackets when the drive is surface mounted. The two brackets should be installed to the top of the drive as shown in Figure 3-16.

Figure 3-16 Location of top surface mounting brackets for size 5 and 6

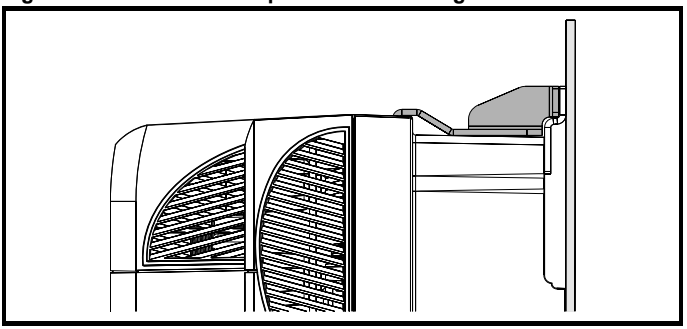

The maximum torque setting for the screws into the drive chassis is 10Nm (7.4 lb ft).

3.5 Enclosure

3.5.1 Enclosure layout (size 2 to 6)

Please observe the clearances in the diagram below taking into account any appropriate notes for other devices / auxiliary equipment when planning the installation.

Figure 3-17 Enclosure layout

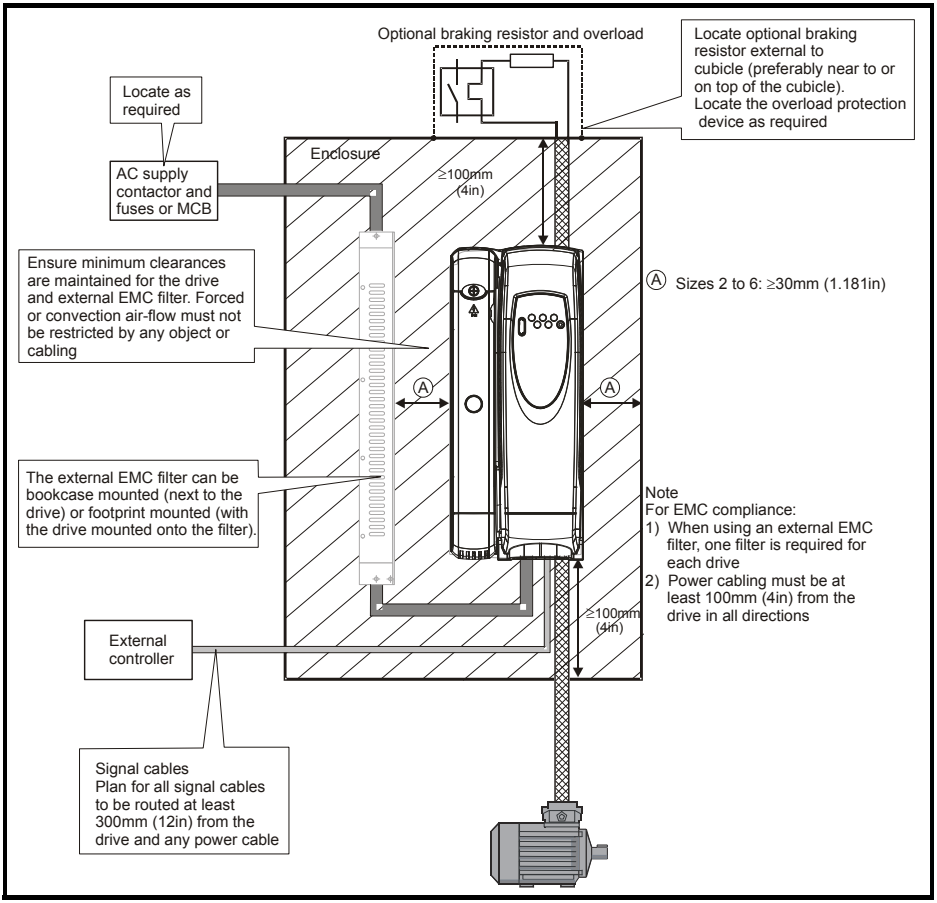

3.6 Electrical terminals

Figure 3-18 Location of power and ground terminals

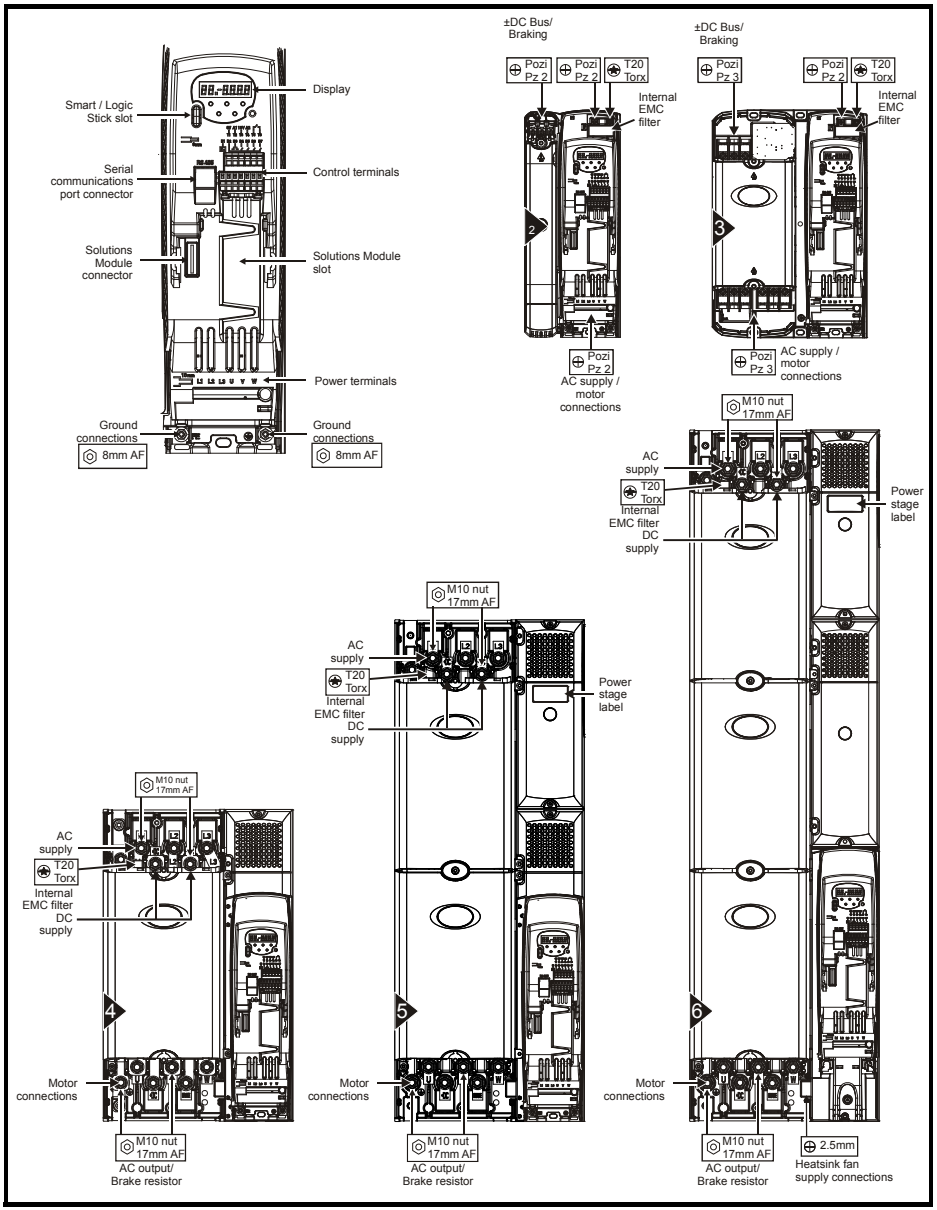

3.6.1 Terminal sizes and torque settings

WARNING

To avoid a fire hazard and maintain validity of the UL Listing, adhere to the specified tightening torques for the power and ground terminals. Refer to the following tables.

Table 3-2 Drive control and relay terminal data

Model	Connection type
All	Spring terminals

Table 3-3 Drive power terminal data

Model size	AC terminals	DC and braking terminals	Ground terminals
2	Plug-in terminal block 1.5Nm (1.1 lb ft)	Terminal block (M5 screws) 1.5Nm (1.1 lb ft)	M5 stud 4.0Nm (2.9 lb ft)
3	Terminal block (M6 screws) 2.5Nm (1.8 lb ft)		6.0Nm (4.4 lb ft)
4	M10 stud 15Nm (11.1 lb ft)		M10 stud 12Nm (8.8 lb ft)
5			
6			
Torque tolerance			±10%

4 Electrical Installation

4.1 Power connections

4.1.1 AC and DC connections

Figure 4-1 Size 2 power connections

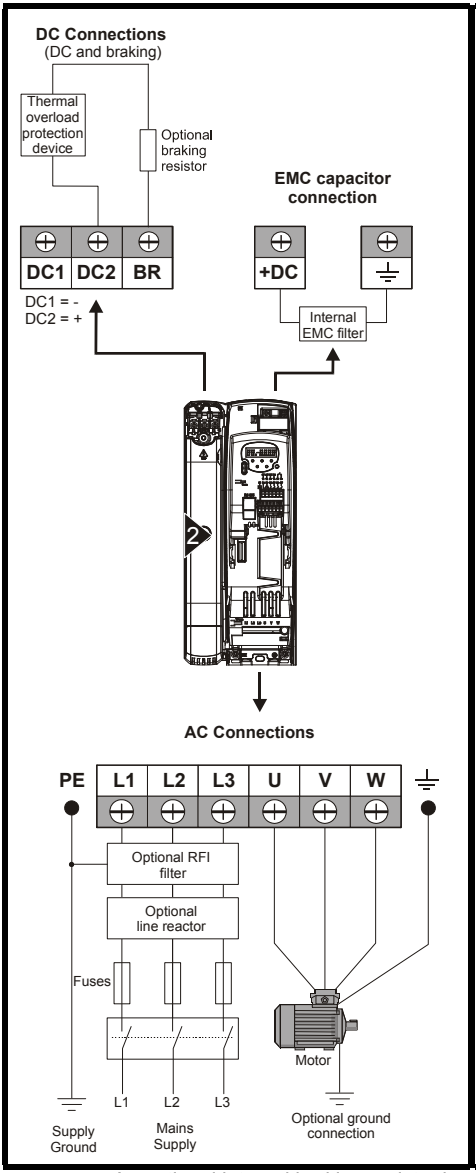

Figure 4-2 Size 3 power connections

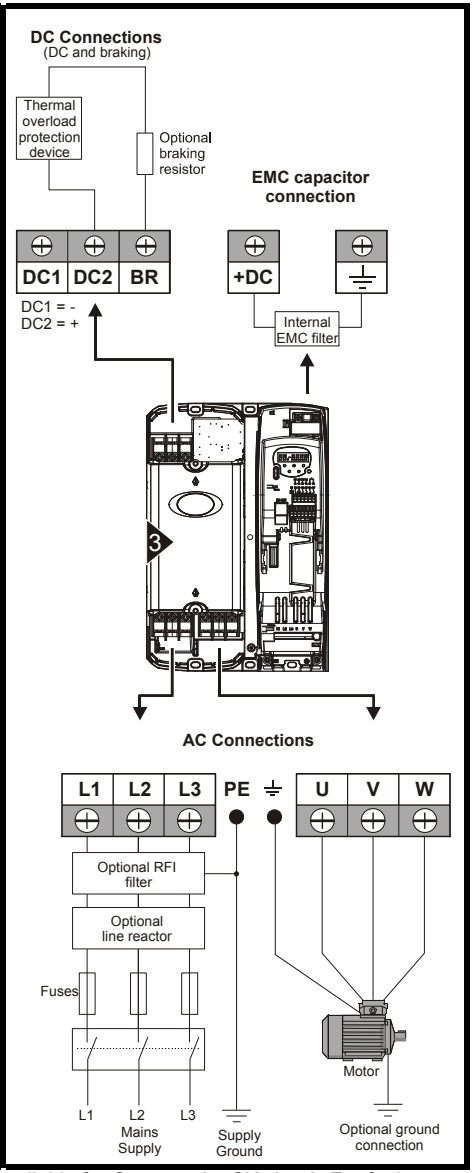

NOTE An optional internal braking resistor is available for Commander SK size 2. For further information, see the *Commander SK Technical Data Guide*.

Figure 4-3 Size 4, 5 and 6 power connections

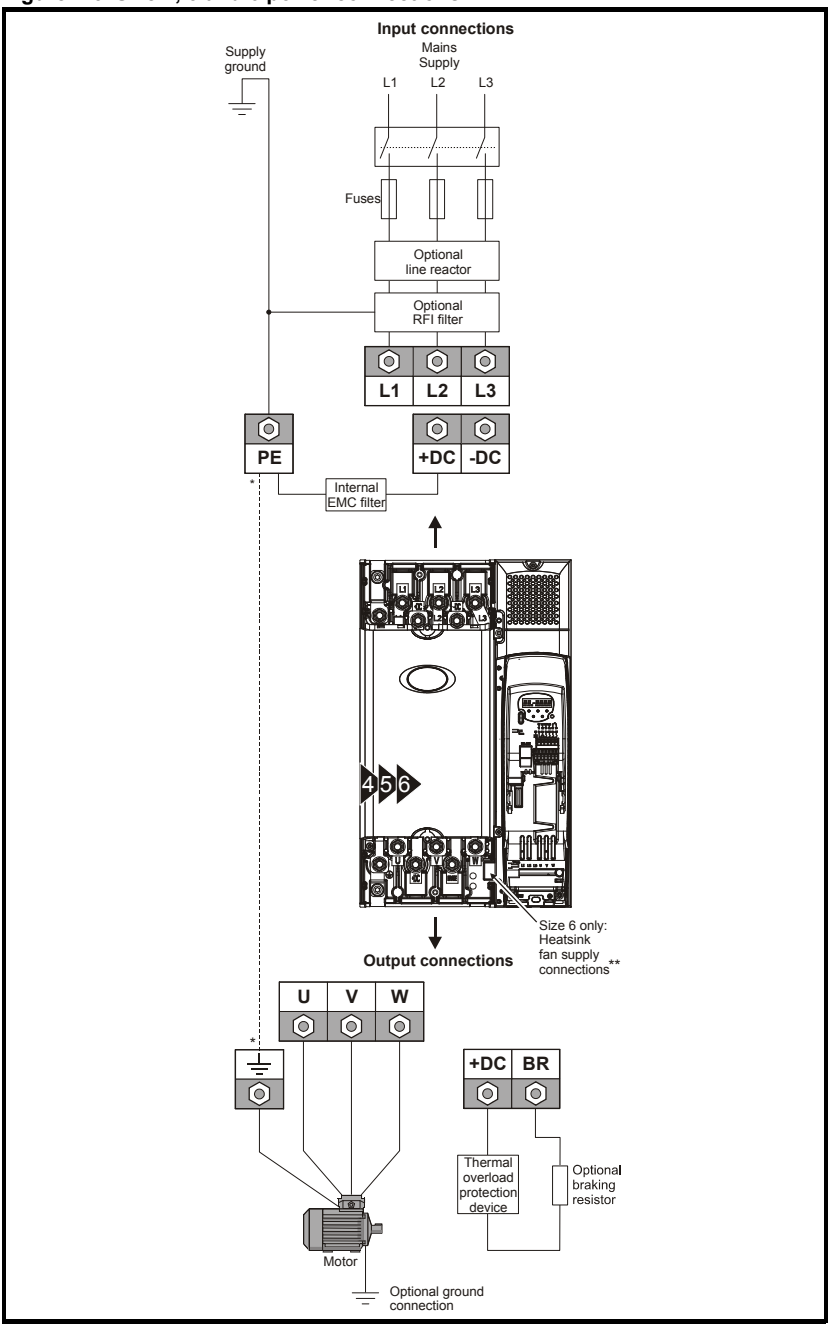

*See section 4.1.3 *Ground connections* on page 36.

** See section 4.2.2 *Heatsink fan supply* on page 38 for more information.

4.1.2 Starts per hour

Electric starts

With the supply permanently connected the number of electronic motor starts per hour is only limited by motor and drive thermal limits.

Power starts

The number of starts by connection of the AC supply is limited. The start up circuit will allow for three consecutive starts at 3 second intervals on initial power up. Exceeding the rated number of starts per hour, presented in the table below, could result in damage to the start up circuit.

Frame size	Maximum AC line starts per hour evenly spaced in time
2 to 6	20

CAUTION

Braking resistor overload protection parameter settings

Failure to observe the following information may damage the resistor.

The *Commander SK* software contains an overload protection function for a braking resistor. The braking resistor overload protection Pr **10.30** and Pr **10.31** should be used for SK2. Below are the parameter settings.

Parameter		200V drive	400V drive
Full power braking time	Pr **10.30**	0.09	0.02
Full power braking period	Pr **10.31**	2.0	

For more information on the braking resistor software overload protection, see the *Commander SK Advanced User Guide*.

If the heatsink mounted braking resistor is to be used at more than half of its average power rating then the drive's cooling fan must be set to full speed by setting Pr **6.45** to On (1).

CAUTION

Braking resistor: High temperatures and overload protection

Braking resistors can reach high temperatures. Locate braking resistors so that damage cannot result. Use cable having insulation capable of withstanding the high temperatures.

It is essential that the braking resistor be protected against overload caused by a failure of the brake control. Unless the resistor has built in protection, the circuit below should be used, where the thermal protection device disconnects the AC supply to the drive.

Figure 4-4 Typical protection circuit for a braking resistor

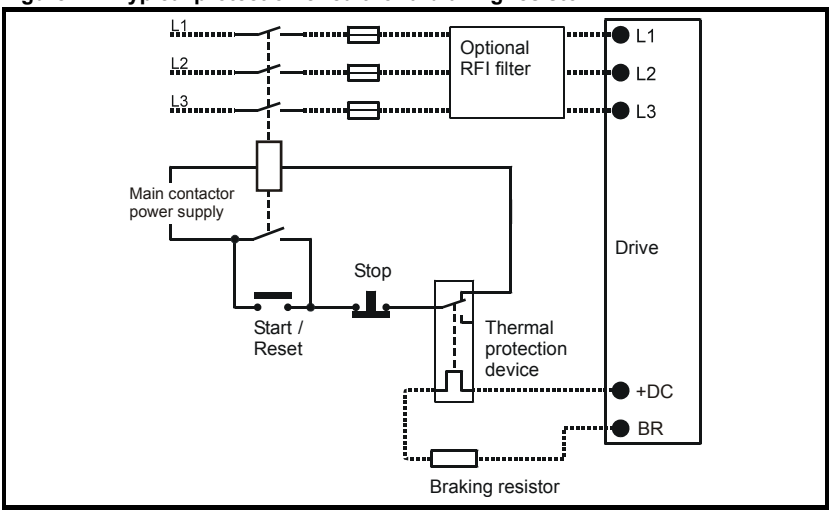

For further information on braking, refer to the *Commander SK Technical Data Guide.*

NOTE For Commander SK size 2 and 3, a single phase supply should be connected between L1 and L2. Please refer to the *Commander SK Technical Data Guide* for derating information.

4.1.3 Ground connections

On Commander SK size 2, the supply and motor ground connections are made using the grounding bridge that locates at the bottom of the drive.

Figure 4-5 Size 2 ground connections

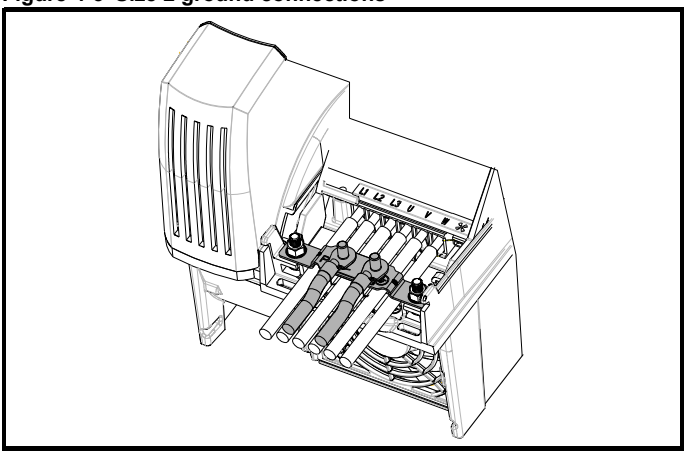

On Commander SK size 3, the supply and motor ground connections are made using an M6 nut and bolt that locates in the fork protruding from the heatsink between the AC supply and motor output terminals.

Figure 4-6 Size 3 ground connections

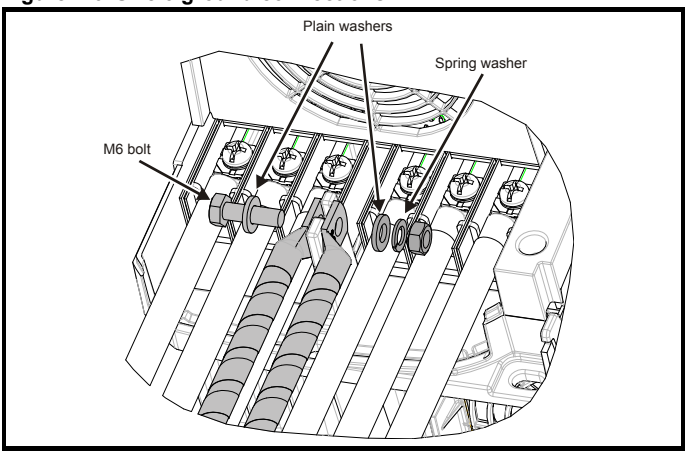

On Commander SK size 4, 5 and 6, the supply and motor ground connections are made using an M10 bolt at the top (supply) and bottom (motor) of the drive.

Figure 4-7 Size 4, 5 and 6 ground connections

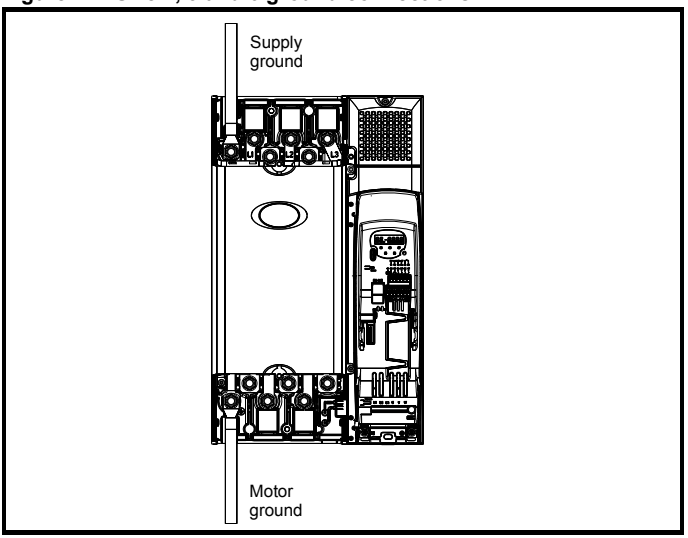

The supply and motor ground connections to the drive are connected internally by a copper conductor with a cross-sectional area given below:

Size 4: 19.2mm^2 (0.03in^2, or slightly bigger than 6 AWG)

Size 5: 60mm^2 (0.09in^2, or slightly bigger than 1 AWG)

Size 6: 75mm^2 (0.12in^2, or slightly bigger than 2/0 AWG)

This connection is sufficient to provide the ground (equipotential bonding) connection for the motor circuit under the following conditions:

To standard	Conditions
IEC 60204-1 & EN 60204-1	Supply phase conductors having cross-sectional area not exceeding: Size 4: 38.4mm^2 Size 5: 120mm^2 Size 6: 150mm^2
NFPA 79	Supply protection device rating not exceeding: Size 4: 200A Size 5: 600A Size 6: 1000A

If the necessary conditions are not met, an additional ground connection must be provided to link the motor circuit ground and the supply ground.

4.2 Heatsink fan

4.2.1 Heatsink fan operation

The Commander SK is ventilated by an internal heatsink mounted fan. The fan housing forms a baffle plate, channelling the air through the heatsink chamber. Thus, regardless of the mounting method (surface or through-panel mounting), the fitting of additional baffle plates is not required.

Ensure the minimum clearances around the drive are maintained to allow air to flow freely.

The heatsink fan on Commander SK size 2 is a dual speed fan and on size 3 to 6, it is a variable speed fan. The drive controls the speed at which the fan runs based on the temperature of the heatsink and the drive's thermal model system. The Commander SK size 3 to 6 is also installed with a single speed fan to ventilate the capacitor bank.

The heatsink fan on the Commander SK size 2 to 5 is supplied internally by the drive. The heatsink fan on the size 6 requires an external +24Vdc power supply.

4.2.2 Heatsink fan supply

The heatsink fan on size 6 requires an external +24Vdc supply. The connections for the heatsink fan supply must be made to the upper terminal connector near to the W phase output on the drive. See Figure 4-8 for the position of the heatsink fan supply connector.

Figure 4-8 Location of size 6 heatsink fan supply connections

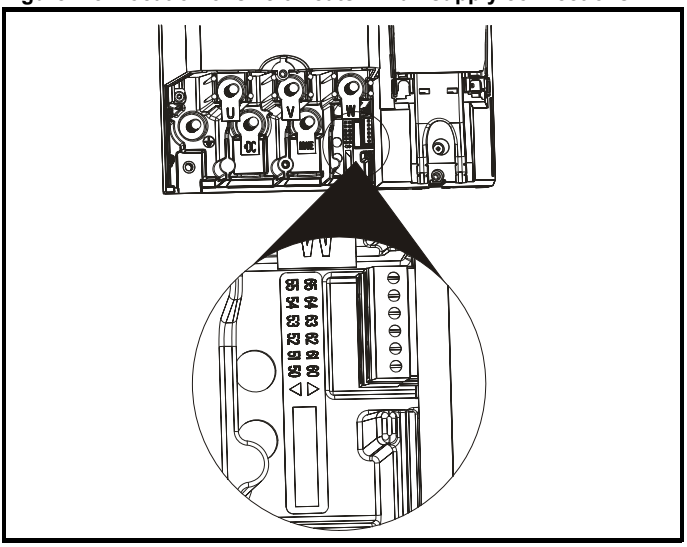

Figure 4-9 Size 6 heatsink fan supply connections

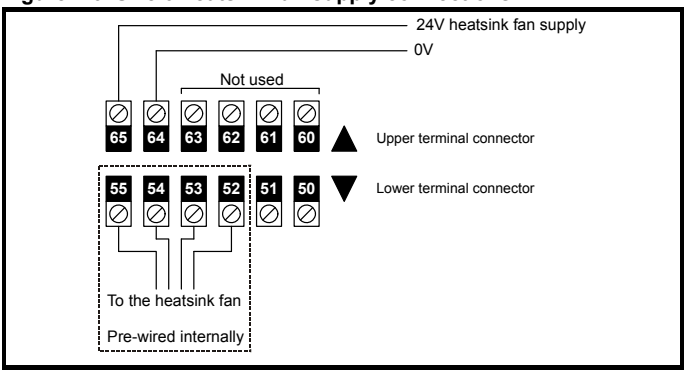

The heatsink fan supply requirements are as follows:

Nominal voltage:	24Vdc
Minimum voltage:	23.5Vdc
Maximum voltage:	27Vdc
Current drawn:	3.3A
Recommended power supply:	24V, 100W, 4.5A
Recommended fuse:	4A fast blow (I^2t less than $20A^2s$)

WARNING

The AC supply to the drive must be installed with suitable protection against overload and short circuits. Failure to observe this requirement will cause risk of fire. See section 2.3 *Rating Data* on page 11 for fuse data.

WARNING

The drive must be grounded by a conductor sufficient to carry the prospective fault current in the event of a fault. See also the warning in section 4.3 *Ground leakage* relating to ground leakage current.

4.3 Ground leakage

The ground leakage current depends upon the internal EMC filter being installed. The drive is supplied with the filter installed. Instructions on removal of the internal EMC filter are given in section 4.3.1 *Internal EMC filter* on page 40.

With internal EMC filter installed

Size 2 and 3

28mA* AC at 400V, 50Hz
30μA DC with 600V DC bus (10MΩ)

Size 4 to 6

56mA* at 400V, 50Hz
18μA DC with 600V DC bus (33MΩ)

*Proportional to the supply voltage and frequency.

NOTE

The above leakage currents are just the leakage currents of the drive with the internal EMC filter connected and do not take into account any leakage currents of the motor or motor cables.

With internal EMC filter removed

<1mA

NOTE

In both cases, there is an internal voltage surge protection device connected to ground. Under normal circumstances this carries negligible current.

WARNING

When the internal EMC filter is installed, the leakage current is high. In this case, a permanent fixed ground connection must be provided, or suitable measures taken to prevent a safety hazard occurring if the connection is lost.

4.3.1 Internal EMC filter

It is recommended that the internal EMC filter be kept in place unless there is a specific reason for removing it.

WARNING

On Commander SK size 3, 4, 5 and 6, when used with ungrounded (IT) supplies, the internal EMC filter must be removed unless additional motor ground fault protection is installed or, in the case of size 3 only, the external EMC filter is also used.

For instructions on removal, refer to Figure 4-10.

Figure 4-10 Removal of the internal EMC filter, size 2 and 3

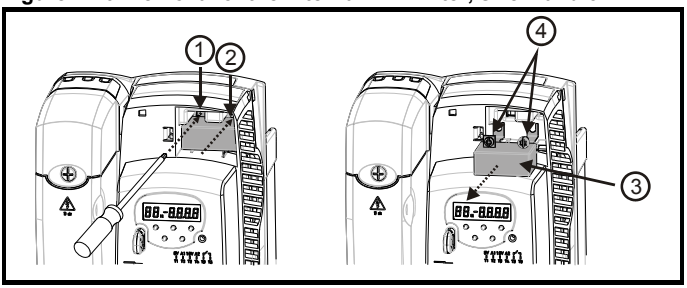

Loosen/remove screws as shown (1) and (2).

Remove filter (3) and ensure the screws are replaced and re-tightened (4).

Figure 4-11 Removal of the internal EMC filter, size 4, 5 and 6

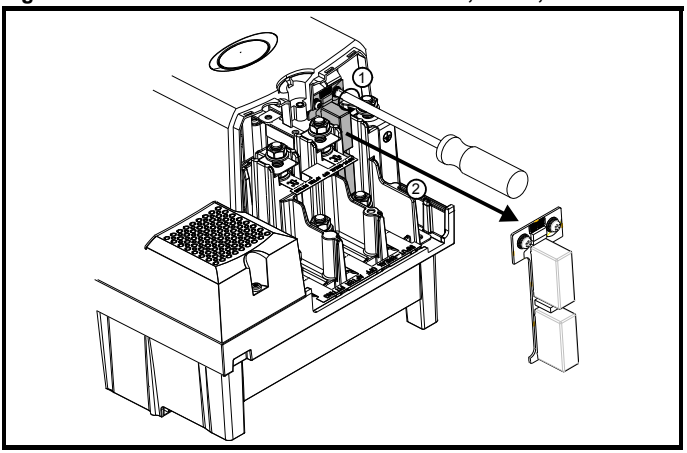

Loosen screws (1). Remove EMC filter in the direction shown (2).

The internal EMC filter reduces radio-frequency emissions into the line power supply. Where the motor cable length is short, it permits the requirements of EN 61800-3:2004 to be met for the second environment. For longer motor cables, the filter continues to provide a useful reduction in emission level, and when used with any length of shielded motor cable up to the limit for the drive, it is unlikely that nearby industrial equipment will be disturbed. It is recommended that the filter be used in all applications unless the instructions given above require it to be removed or the ground leakage current of 28mA (for sizes 2 and 3) or 56mA (for sizes 4 to 6) is unacceptable.

4.3.2 Use of earth (ground) leakage circuit breakers (ELCB) / residual current device (RCD)

There are three common types of ELCB/RCD:

Type AC - detects AC fault currents
Type A - detects AC and pulsating DC fault currents (provided the DC current reaches zero at least once every half cycle)
Type B - detects AC, pulsating DC and smooth DC fault currents

- Type AC should never be used with drives
- Type A can only be used with single phase drives
- Type B must be used with three phase drives

4.3.3 Further EMC precautions

Further EMC precautions are required if more stringent EMC emission requirements apply:

- Operation in the first environment
- Conformity to the generic emission standards
- Equipment which is sensitive to electrical interference operating nearby

In this case it is necessary to use:

The optional external EMC filter
A shielded motor cable, with the shield clamped to the grounded metal panel
A shielded control cable, with the shield clamped to the grounded metal panel
Full instructions are given in the *Commander SK Technical Data Guide*

A full range of external EMC filters is also available for use with Commander SK.

4.4 EMC (Electromagnetic compatibility)

4.4.1 Grounding hardware

The Commander SK size 2 and 3 are provided with a grounding bracket and grounding clamp. They can be used as cable management bracket/clamp or they can be used to facilitate EMC compliance. They provide a convenient method for direct grounding of cable shields without the use of 'pig tails'. Cable shields can be bared and clamped to the grounding bracket using metal clips or clamps* (not supplied) or cable ties. Note that the shield must in all cases be continued through the cable clamp to the intended terminal on the drive, in accordance with the connection details for the specific signal.

*A suitable clamp is the Phoenix DIN rail mounted SK14 cable clamp (for cables with a maximum outer diameter of 14mm).

Figure 4-12 Fitting the grounding clamp

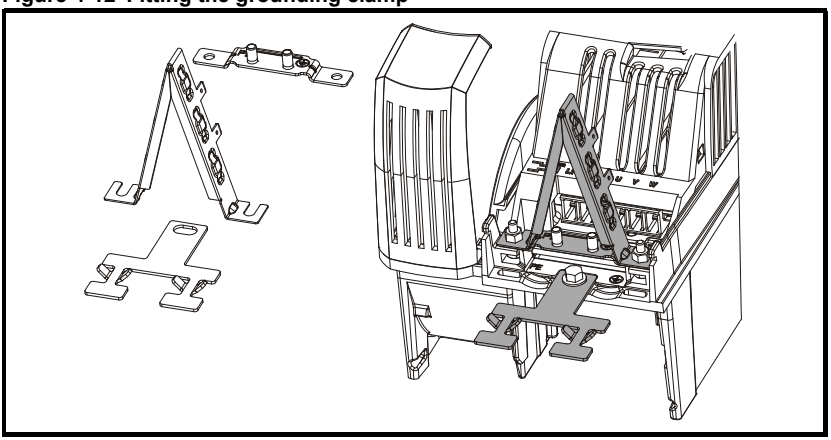

A faston tab is located on the grounding bracket for the purpose of connecting the drive 0V to ground should the user require to do so.

WARNING

On Commander SK size 2, the grounding bracket is secured using the power ground terminal of the drive. Ensure that the supply ground connection is secure after fitting/removing the grounding bracket. Failure to do so will result in the drive not being grounded.

Figure 4-13 Grounding link bracket in its surface mount position (as supplied)

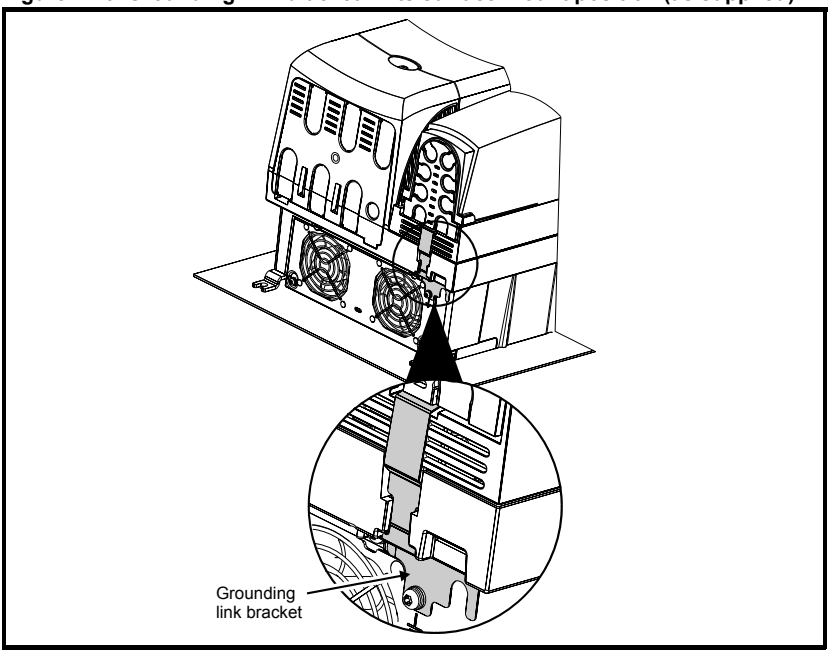

4.5 Control terminals I/O specification

WARNING

The control circuits are isolated from the power circuits in the drive by basic insulation (single insulation) only. The installer must ensure that the external control circuits are insulated from human contact by at least one layer of insulation (supplementary insulation) rated for use at the AC supply voltage.

WARNING

If the control circuits are to be connected to other circuits classified as Safety Extra Low Voltage (SELV) (e.g. to personal computer), an additional isolating barrier must be included in order to maintain the SELV classification.

WARNING

The above warnings also apply to the PCB edge connector for the optional Solutions Modules. To allow a Solutions Module to be installed to Commander SK, a protective cover must be removed to allow access to the PCB edge connector. See Figure 3-18 on page 31. This protective cover provides protection from direct contact of the PCB edge connector by the user. When this cover is removed and a Solutions Module installed, the Solutions Module provides the protection from direct contact by the user. If the Solutions Module is then removed, this PCB edge connector becomes exposed. The user is required to provide protection in this case, to protect against direct contact of this PCB edge connector.

Electric shock risk

The voltages present in the following locations can cause severe electric shock and may be lethal:

- AC supply cables and connections
- DC and brake cables, and connections
- Output cables and connections
- Many internal parts of the drive, and external option units

Unless otherwise indicated, control terminals are single insulated and must not be touched.

User interface terminals can only be considered safe to touch if double insulation is present and the terminals are SELV compliant.

It has come to our attention that not all users are following this advice and that on touching the 0V connection on a size 3 drive an electric shock has been experienced.

The voltage which is present between 0V and ground / earth is due to capacitive coupling between the power and control circuits in the inverter. The stray capacitance between the power and control circuits results in a high frequency leakage current flowing. The current, which flows is dependent on the level of capacitance present. Note that because of the high frequency content it cannot be measured correctly by a DVM.

The size 3 drive has a relatively high capacitance compared to size 2 and the current can cause a painful shock, which is not directly hazardous, but could result in an accident.

The voltage present between the 0V terminal and earth / ground may damage external equipment connected to the drive's 0V terminal.

On the Commander SK the serial communications port is not double insulated and thus the serial communications 0V is connected directly to the control 0V therefore equipment connected via serial communications can also be affected.

The following precautions should be implemented. This can be easily completed in two ways:

1. Connecting the 0V directly to the triangular grounding bracket supplied with the drive.
2. Connecting the 0V directly to earth / ground using the M5 ground connection.

If it is required for the 0V to remain floating with respect to earth, such as when a 4-20mA reference is being used, then this connection can be made using a capacitor of 15nF or higher (600Vdc). However, it should be recognized that there is only single isolation, and the appropriate access protection should be facilitated.

The same part is available to order from your drive supplier for the Commander SK if required, the part number is: 9500-0083. It should be connected as shown in Figure 4-14.

Figure 4-14

NOTE See Pr **05** on page 53 (*Drive configuration*) for terminal connection / set-up diagrams and details.

NOTE The digital inputs are positive logic only.

NOTE The analog inputs are unipolar. For information on a bipolar input, refer to the *Commander SK Advanced User Guide*.

T1	**0V common**

T2	**Analog input 1 (A1), either voltage or current (see Pr 16)**
Voltage: Current input	0 to 10V: mA as parameter range
Parameter range	4-20, 20-4, 0-20, 20-0, 4-.20, 20-.4, VoLt
Scaling	Input range automatically scaled to Pr **01** *Minimum set speed* / Pr **02** *Maximum set speed*
Input impedance	200Ω (current): 100kΩ (voltage)
Resolution	0.1%

0-20: Current input 0 to 20mA (20mA full scale)
20-0: Current input 20 to 0mA (0mA full scale)
4-20: Current input 4 to 20mA with current loop loss (cL1) trip (20mA full scale)
20-4: Current input 20 to 4mA with current loop loss (cL1) trip (4mA full scale)
4-.20: Current input 4 to 20mA with no current loop loss (cL1) trip (20mA full scale)
20-.4: Current input 20 to 4mA with no current loop loss (cL1) trip (4mA full scale)
VoLt: 0 to 10V input

T3	**+10V reference output**
Maximum output current	5mA

T4	Analog input 2 (A2), either voltage or digital input
Voltage: Digital input	0 to +10V: 0 to +24V
Scaling (as voltage input)	Input range automatically scaled to Pr **01** *Minimum set speed* / Pr **02** *Maximum set speed*
Resolution	0.1%
Input impedance	100kΩ (voltage): 6k8 (digital input)
Normal threshold voltage (as digital input)	+10V (positive logic only)

T5 T6	Status relay - Drive ok (Normally open)
Contact voltage rating	240Vac 30Vdc
Contact maximum current rating	2Aac 240V 4Adc 30V resistive load (2A 35Vdc for UL requirements). 0.3Adc 30V inductive load (L/R=40ms)
Contact minimum recommended rating	12V 100mA
Contact isolation	1.5kVac (over voltage category II)
Operation of contact (drive ok - default condition)	OPEN AC supply removed from drive AC supply applied to drive with drive in tripped condition CLOSED AC supply applied to drive with drive in a 'ready to run' or 'running' condition (not tripped)

WARNING

Provide fuse or over-current protection in status relay circuit.

WARNING

A flyback diode should be installed across inductive loads connected to the status relay.

B1	Analog voltage output - Motor speed
Voltage output	0 to +10V
Scaling	0V represents 0Hz/rpm output +10V represents the value in Pr **02** *Maximum set speed*
Maximum output current	5mA
Resolution	0.1%

B2	+24V output
Maximum output current	100mA

B3	Digital output - Zero speed (or digital input)
Voltage range	0 to +24V
Maximum output current	50mA at +24V (current source)

NOTE The total available current from the digital output plus the +24V output is 100mA. Terminal B3 can also be configured as a digital input, frequency output or PWM output. Refer to the *Commander SK Advanced User Guide* for more information.

B4	Digital Input - Enable/Reset*/**
B5	Digital Input - Run Forward**
B6	Digital Input - Run Reverse**
B7	Digital Input - Local/Remote speed reference select (A1/A2)
Logic	Positive logic only
Voltage range	0 to +24V
Nominal threshold voltage	+10V

Terminal B7 can also be configured as a thermistor input or frequency input. Refer to the *Commander SK Advanced User Guide* for more information.

If the enable terminal is opened, the drive's output is disabled and the motor will coast to a stop. The drive will not re-enable for 1.0s after the enable terminal is closed again.

*Following a drive trip, opening and closing the enable terminal will reset the drive. If the run forward or run reverse terminal is closed, the drive will run straight away.

**Following a drive trip and a reset via the stop/reset key, the enable, run forward or run reverse terminals will need to be opened and closed to allow the drive to run. This ensures that the drive does not run when the stop/reset key is pressed.

The enable, run forward and run reverse terminals are level triggered apart from after a trip where they become edge triggered. See * and ** above.

If the enable and run forward or enable and run reverse terminals are closed when the drive is powered up, the drive will run straight away up to a set speed.

If both the run forward and run reverse terminals are closed, the drive will stop under the control of the ramp and stopping modes set in Pr **30** and Pr **31**.

5 Keypad and Display

The keypad and display are used for the following:

- Displaying the operating status of the drive
- Displaying a fault or trip code
- Reading and changing parameter values
- Stopping, starting and resetting the drive

Figure 5-1 Keypad and display

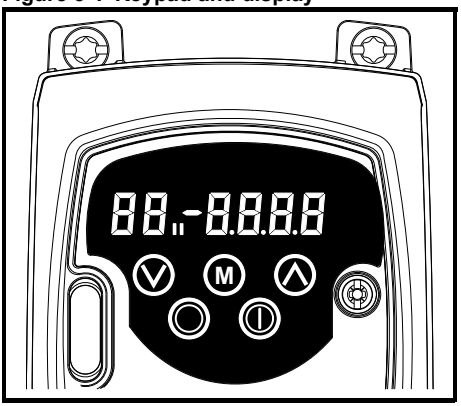

II on the display indicates if motor map 1 or 2 is selected.

5.1 Programming keys

The (M) **MODE** key is used to change the mode of operation of the drive.

The (▲) **UP** and (▼) **DOWN** keys are used to select parameters and edit their values. In keypad mode, they are used to increase and decrease the speed of the motor.

5.2 Control keys

The (I) **START** key is used to start the drive in keypad mode.

The (●) **STOP/RESET** key is used to stop and reset the drive in keypad mode. It can also be used to reset the drive in terminal mode.

NOTE With USA defaults, the (●) STOP/RESET key will be enabled.

NOTE It is possible to change parameter values more quickly. See Chapter 4 Keypad and display in the *Commander SK Advanced User Guide* for details.

5.3 Selecting and changing parameters

NOTE This procedure is written from the first power up of the drive and assumes no terminals have been connected, no parameters have been changed and no security has been set.

Figure 5-2

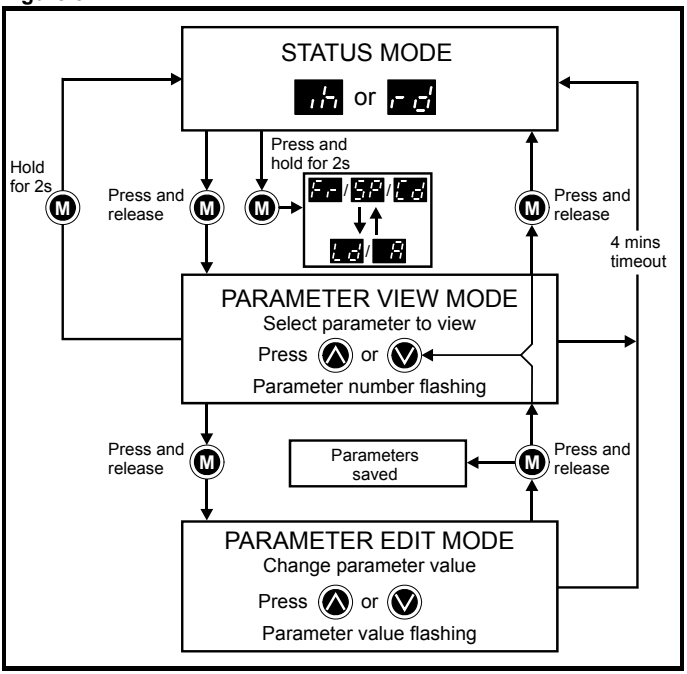

When in Status mode, pressing and holding the M MODE key for 2 seconds will change the display from displaying a speed indication to displaying load indication and vice versa.

Pressing and releasing the M MODE key will change the display from status mode to parameter view mode. In parameter view mode, the left hand display flashes the parameter number and the right hand display shows the value of that parameter.

Pressing and releasing the M MODE key again will change the display from parameter view mode to parameter edit mode. In parameter edit mode, the right hand display flashes the value in the parameter being shown in the left hand display.

Pressing the M MODE key in parameter edit mode will return the drive to the parameter view mode. If the M MODE key is pressed again then the drive will return to status mode, but if either of the up or down keys are pressed to change the parameter being viewed before the M MODE key is pressed, pressing the M MODE key will change the display to the parameter edit mode again. This allows the user to very easily change between parameter view and edit modes while commissioning / starting-up the drive.

Status Modes

Left hand display	Status	Explanation
rd	Drive ready	The drive is enabled and ready for a start command. The output bridge is inactive.
inh	Drive inhibited	The drive is inhibited because there is no enable command, or a coast to stop is in progress or the drive is inhibited during a trip reset.
tr	Drive has tripped	The drive has tripped. The trip code will be displayed in the right hand display.
dc	DC injection braking	DC injection braking current is being applied to the motor.
AC	Mains loss	See the *Commander SK Advanced User Guide.*

Speed Indications

Display Mnemonic	Explanation
Fr	Drive output frequency in Hz
SP	Motor speed in rpm
Cd	Machine speed in customer define units

Load indications

Display Mnemonic	Explanation
Ld	Load current as a % of motor rated load current
A	Drive output current per phase in Amps

5.4 Saving parameters

Parameters are automatically saved when the (M) MODE key is pressed when going from parameter edit mode to parameter view mode.

5.5 Parameter access

There are 3 levels of parameter access controlled by Pr **10**. This determines which parameters are accessible. See Table 5-1.

The setting of the user security Pr **25** determines whether the parameter access is read only (RO) or read write (RW).

Table 5-1 Parameter access

Parameter access (Pr 10)	Parameters accessible
L1	Pr **01** to Pr **10**
L2	Pr **01** to Pr **60**
L3	Pr **01** to Pr **95**

5.6 Security codes

Setting a security code allows view only access to all parameters.

A security code is locked into the drive when Pr **25** is set to any other value than 0 and then **LoC** is selected in Pr **10**. On pressing the Ⓜ MODE key, Pr **10** is automatically changed from **LoC** to **L1** and Pr **25** will be automatically set to 0 so as not to reveal the security code.

Pr **10** may be changed to L2 or L3 to allow view only access to parameters.

5.6.1 Setting a security code

- Set Pr **10** to L2.
- Set Pr **25** to the desired security code e.g. 5
- Set Pr **10** to LoC.
- Press the Ⓜ MODE key
- Pr **10** will now be reset to L1 and Pr **25** will be reset to 0.
- The security code will now be locked into the drive.
- Security will also be set if the drive is powered down after a security code has been set into Pr **25**.

5.6.2 Unlocking a security code

Select parameter to be edited

Press the Ⓜ MODE key, the right hand display will flash 'CodE'

Press the ⓐ UP key to start entering the set security code. The left hand display will show 'Co'

Enter the correct security code

Press the Ⓜ MODE key

If the correct security code has been entered, the right hand display will flash and can now be adjusted.

If the security code has been entered incorrectly, the left hand display will flash the parameter number. The above procedure should be followed again.

5.6.3 Re-locking security

When a security code has been unlocked and the required parameter changes made, to re-lock the same security code:

- Set Pr **10** to LoC
- Press the ◉ STOP/RESET key

5.6.4 Setting security back to 0 (zero) - no security

- Set Pr **10** to L2
- Go to Pr **25**
- Unlock security as described above.
- Set Pr **25** to 0
- Press the Ⓜ MODE key.

NOTE If a security code has been lost or forgotten, please contact your local drive centre or distributor

5.7 Setting drive back to default values

- Set Pr **10** to L2
- Set Pr **29** to Eur and press the Ⓜ MODE key. This loads 50Hz default parameters.

or

- Set Pr **29** to USA and press the Ⓜ MODE key. This loads 60Hz default parameters.

6 Parameters

Parameters are grouped together into appropriate subsets as follows:

Level 1

Pr **01** to Pr **10**: Basic drive set-up parameters

Level 2

Pr **11** to Pr **12**: Drive operation set-up parameters
Pr **15** to Pr **21**: Reference parameters
Pr **22** to Pr **29**: Display / keypad configuration
Pr **30** to Pr **33**: System configuration
Pr **34** to Pr **36**: Drive user I/O configuration
Pr **37** to Pr **42**: Motor configuration (non-standard set-up)
Pr **43** to Pr **44**: Serial communications configuration
Pr **45**: Drive software version
Pr **46** to Pr **51**: Mechanical brake configuration
Pr **52** to Pr **54**: Fieldbus configuration
Pr **55** to Pr **58**: Drive trip log
Pr **59** to Pr **60**: PLC ladder programming configuration
Pr **61** to Pr **70**: User definable parameter area

Level 3

Pr **71** to Pr **80**: User definable parameter set-up
Pr **81** to Pr **95**: Drive diagnostics parameters

These parameters can be used to optimise the set-up of the drive for the application.

6.1 Parameter descriptions - Level 1

No	Function	Range	Defaults	Type
01	Minimum set speed	0 to Pr **02** Hz	0.0	RW

Used to set the minimum speed at which the motor will run in both directions.
(0V reference or minimum scale current input represents the value in Pr **01**).

No	Function	Range	Defaults	Type
02	Maximum set speed	0 to 1500 Hz	Eur: 50.0, USA: 60.0	RW

Used to set the maximum speed at which the motor will run in both directions.
If Pr **02** is set below Pr **01**, Pr **01** will be automatically set to the value of Pr **02**. (+10V reference or full scale current input represents the value in Pr **02**).

NOTE The output speed of the drive can exceed the value set in Pr **02** due to slip compensation and current limits.

No	Function	Range	Defaults	Type
03	Acceleration rate	0 to 3200.0 s/100Hz	Eur: 5.0, USA: 33.0	RW
04	Deceleration rate		Eur: 10.0, USA: 33.0	

Sets the acceleration and deceleration rate of the motor in both directions in seconds/ 100Hz.

NOTE If one of the standard ramp modes is selected (see Pr **30** on page 62), the deceleration rate could be extended automatically by the drive to prevent over voltage (OV) trips if the load inertia is too high for the programmed deceleration rate.

No	Function	Range	Defaults	Type
05	Drive configuration	AI.AV, AV.Pr, AI.Pr, Pr, PAd, E.Pot, tor, Pid, HVAC	Eur: AI.AV, USA: PAd	RW

The setting of Pr **05** automatically sets up the drives configuration.

NOTE A change to Pr **05** is set by pressing the Ⓜ MODE key on exit from parameter edit mode. The drive must be disabled, stopped or tripped for a change to take place. If Pr **05** is changed while the drive is running, when the Ⓜ MODE key is pressed on exit from parameter edit mode, Pr **05** will change back to its previous value.

NOTE When the setting of Pr **05** is changed, the appropriate drive configuration parameters are set back to their default values.

For example, changing Pr **05** from AI.AV to PAd, means that Pr **11** would change to 0 (un-latched) . In all of the settings below, the status relay is set up as a drive ok relay:

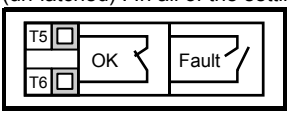

Configuration	Description
AI.AV	Voltage and current input
AV.Pr	Voltage input and 3 preset speeds
AI.Pr	Current input and 3 preset speeds
Pr	4 preset speeds
PAd	Keypad control
E.Pot	Electronic motorized potentiometer control
tor	Torque control operation
Pid	PID control
HVAC	Fan and pump control

Figure 6-1 Pr 05 = AI.AV

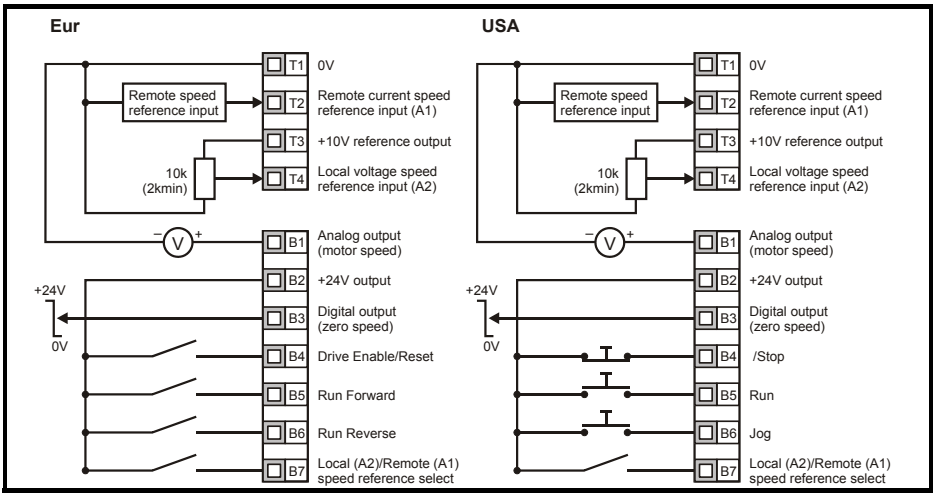

Terminal B7 open: Local voltage speed reference (A2) selected.

Terminal B7 closed: Remote current speed reference (A1) selected.

Figure 6-2 Pr 05 = AV.Pr

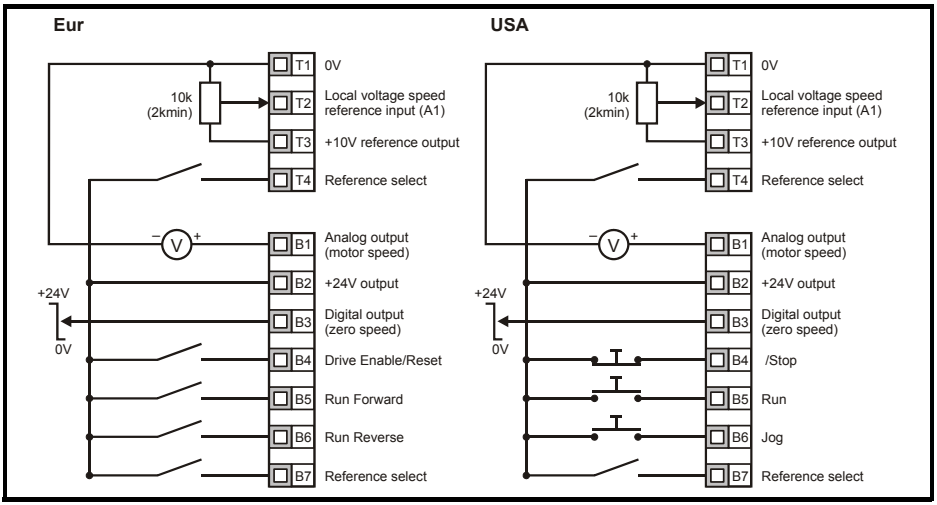

Figure 6-3 Pr 05 = AI.Pr

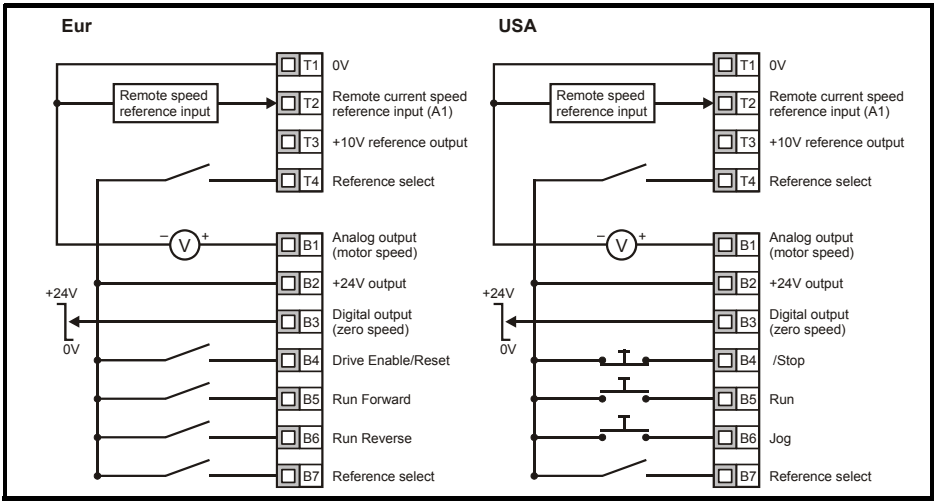

T4	B7	Reference selected
0	0	A1
0	1	Preset 2
1	0	Preset 3
1	1	Preset 4

Figure 6-4 Pr 05 = Pr

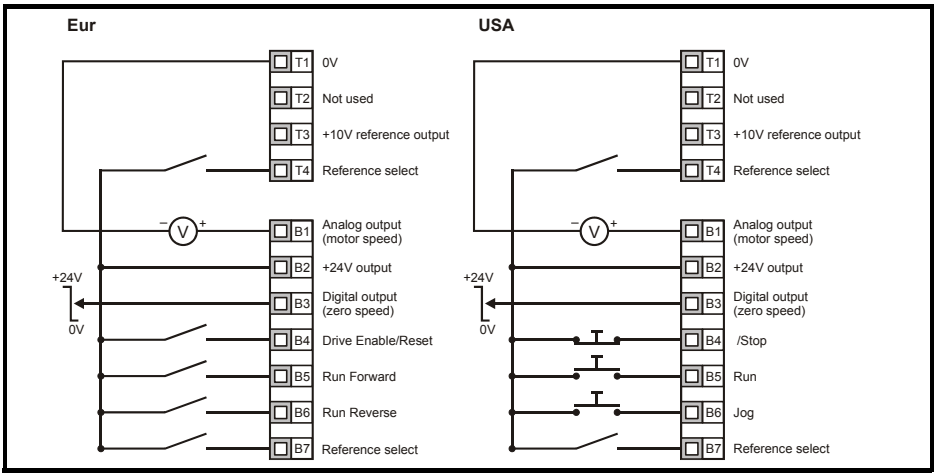

T4	B7	Reference selected
0	0	Preset 1
0	1	Preset 2
1	0	Preset 3
1	1	Preset 4

Figure 6-5 Pr 05 = PAd

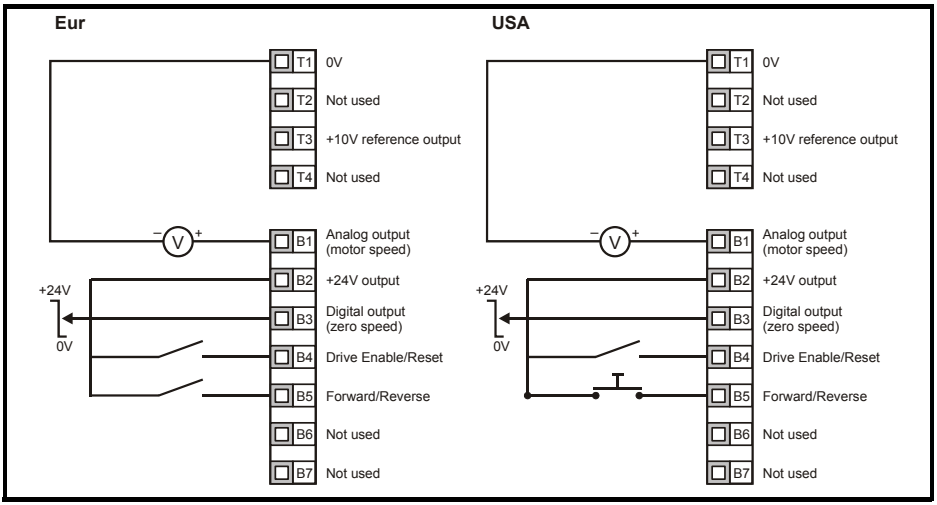

Setting-up a Forward/Reverse terminal in Keypad mode

From the drive's display:

- Set Pr **71** to 8.23
- Set Pr **61** to 6.33
- Press the Stop/Reset key

Terminal B5 will now be set-up as a Forward/Reverse terminal.

Figure 6-6 Pr 05 = E.Pot

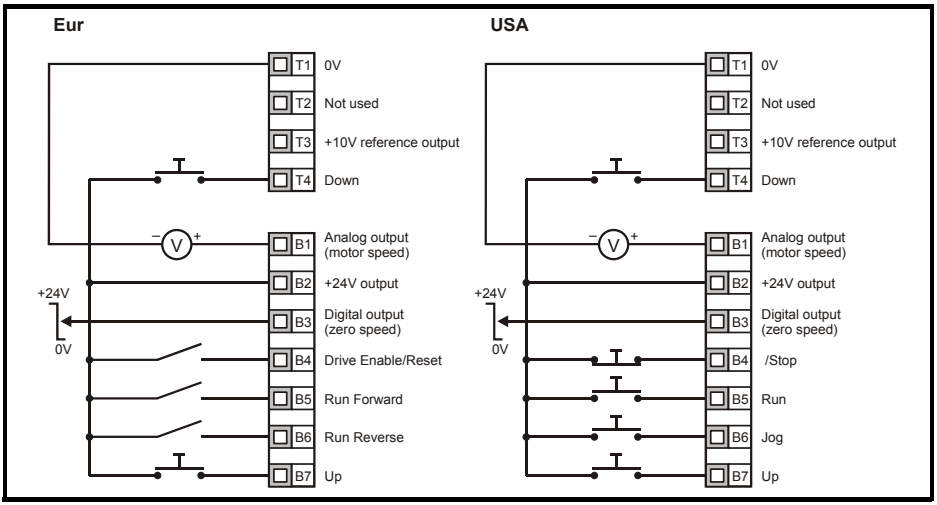

When Pr **05** is set to E.Pot, the following parameters are made available for adjustment:
Pr **61**: Motorized pot up/down rate (s/100%)
Pr **62**: Motorized pot bipolar select (0 = unipolar, 1 = bipolar)
Pr **63**: Motorized pot mode: 0 = zero at power-up, 1 = last value at power-up, 2 = zero at power-up and only change when drive is running, 3 = last value at power-up and only change when drive is running.

Figure 6-7 Pr 05 = tor

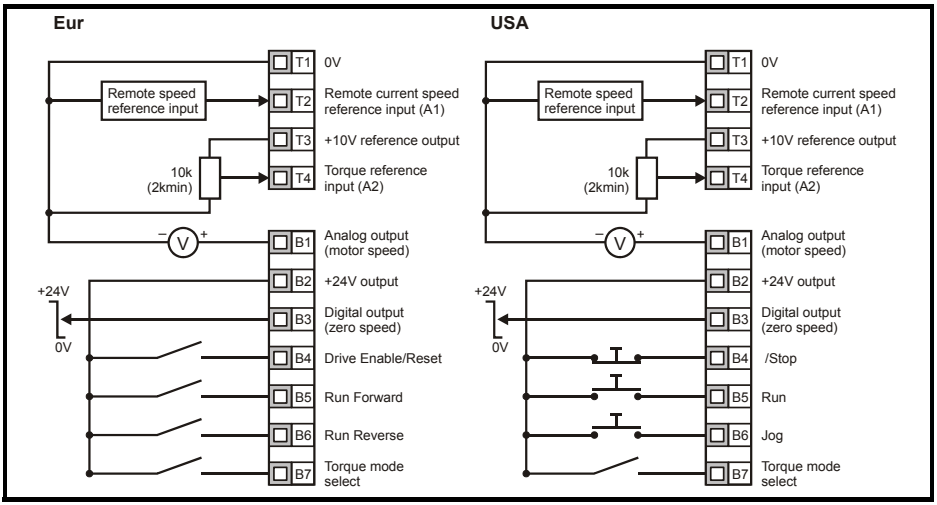

WARNING

When torque mode is selected and the drive is connected to an unloaded motor, the motor speed may increase rapidly to the maximum speed (Pr **02** +20%).

Figure 6-8 Pr 05 = Pid

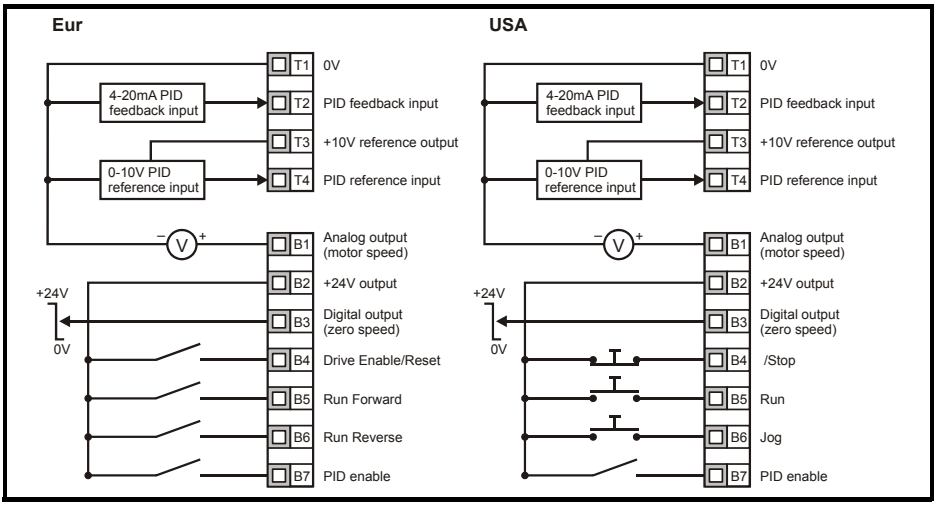

When Pr **05** is set to Pid, the following parameters are made available for adjustment:

Pr **61**: PID proportional gain
Pr **62**: PID integral gain
Pr **63**: PID feedback invert
Pr **64**: PID high limit (%)
Pr **65**: PID low limit (%)
Pr **66**: PID output (%)

Figure 6-9 PID logic diagram

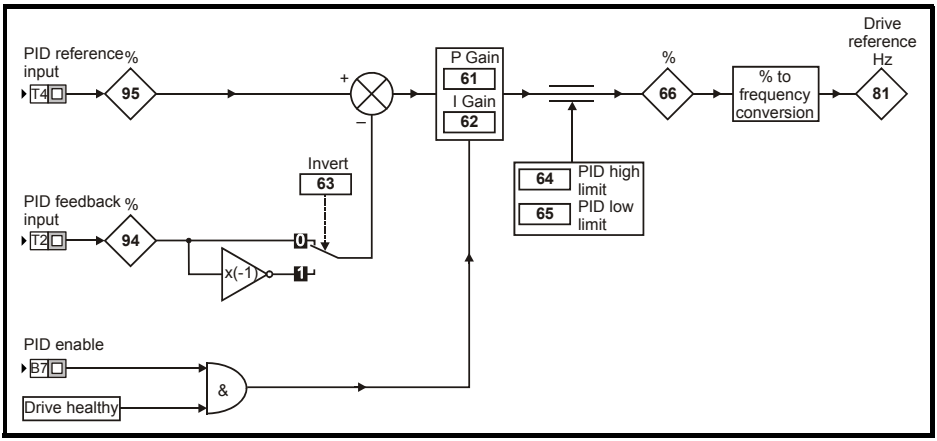

Figure 6-10 Pr 05 = HVAC terminal configuration

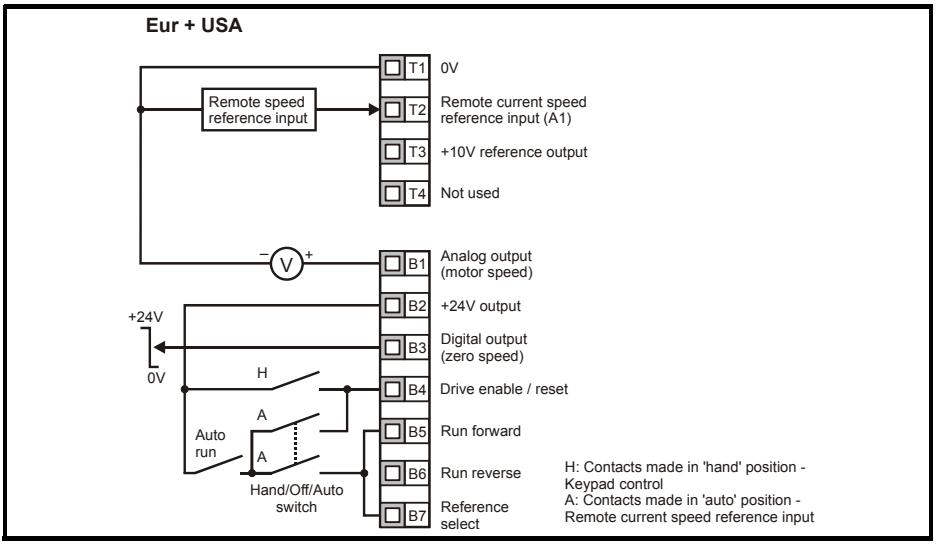

No	Function	Range	Defaults	Type
06	Motor rated current	0 to Drive rated current A	Drive rating	RW

Enter the motor current rating (taken from the motor name plate).

WARNING

Pr **06** *Motor rated current* must be set correctly to avoid a risk of fire in the event of a motor overload.

No	Function	Range	Defaults	Type
07	Motor rated speed	0 to 9999 rpm	Eur: 1500, USA: 1800	RW

Enter the rated full load speed of the motor (taken from the motor name plate).
The motor rated speed is used to calculate the correct slip speed for the motor.

NOTE A value of zero entered into Pr **07** means slip compensation is disabled. Slip compensation should be disabled when using Commander SK on a high inertia load, e.g. fan.

NOTE If the full load speed of the motor is above 9999rpm, enter a value of 0 in Pr **07**. This will disable slip compensation as values >9999 cannot be entered into this parameter.

No	Function	Range	Defaults	Type
08	Motor rated voltage	0 to 240V, 0 to 480V, 0 to 575V, 0 to 690V	Eur: 230/400/575/690 USA: 230/460/575/690	RW

Enter the motor rated voltage (taken from the motor name plate).
This is the voltage applied to the motor at base frequency.

NOTE If the motor is not a standard 50 or 60Hz motor, see Pr **39** on page 65 and adjust accordingly.

No	Function	Range	Defaults	Type
09	Motor power factor	0 to 1	0.85	RW

Enter the motor rated power factor cos φ (taken from the motor name plate).

NOTE The power factor value could be automatically changed after a rotating autotune. See Pr **38** on page 65.

No	Function	Range	Defaults	Type
10	Parameter access	L1, L2, L3, LoC	L1	RW

L1: Level 1 access - only the first 10 parameters can be accessed
L2: Level 2 access - All parameters from 01 to 60 can be accessed
L3: Level 3 access - All parameters from 01 to 95 can be accessed
LoC: Used to lock a security code in the drive. See section 5.6 *Security codes* on page 50 for further details.

6.2 Parameter descriptions - Level 2

No	Function	Range	Defaults	Type
11	Start/Stop logic select	0 to 6	Eur: 0, USA: 4	RW

Pr 11	Terminal B4	Terminal B5	Terminal B6	Latching
0	Enable	Run Forward	Run Reverse	No
1	/Stop	Run Forward	Run Reverse	Yes
2	Enable	Run	Forward / Reverse	No
3	/Stop	Run	Forward / Reverse	Yes
4	/Stop	Run	Jog*	Yes
5	User programmable	Run Forward	Run Reverse	No
6	User Programmable	User Programmable	User Programmable	User Programmable

*Jog can be used without the /Stop input being active.

NOTE A change to Pr **11** is set by pressing the Ⓜ MODE key on exit from parameter edit mode. The drive must be disabled, stopped or tripped for a change to take place. If Pr **11** is changed while the drive is running, when the Ⓜ MODE key is pressed on exit from parameter edit mode, Pr **11** will change back to its previous value.

No	Function	Range	Defaults	Type
12	Brake controller enable	diS, rEL, d IO, USEr	diS	RW

diS: Mechanical brake software disabled
rEL: Mechanical brake software enabled. Brake control via relay T5 & T6. The digital output on terminal B3 is automatically programmed as a drive ok output.
d IO: Mechanical brake software enabled. Brake control via digital output B3. The relay outputs on terminals T5 and T6 are automatically programmed as a drive ok output.
USEr: Mechanical brake software enabled. Brake control to be programmed by user. The relay and digital output are not programmed. The user should programme the brake control to either the digital output or relay.

The output not programmed to the brake control can be programmed to indicate the required signal. (See *Commander SK Advanced User Guide*).

NOTE A change to Pr **12** is set by pressing the Ⓜ MODE key on exit from parameter edit mode. The drive must be disabled, stopped or tripped for a change to take place. If Pr **12** is changed while the drive is running, when the Ⓜ MODE key is pressed on exit from parameter edit mode, Pr **12** will change back to its previous value.

WARNING Great care should be taken when implementing a brake control set-up, as this may cause a safety issue depending on the application, e.g. crane. If in doubt, contact the supplier of the drive for further information.

WARNING Ensure that the brake controller is set-up correctly before the electro-mechanical brake circuit is connected to the drive. Disconnect the electro-mechanical brake circuit before a default is performed.

No	Function	Range	Defaults	Type
13 14	Not used			

No	Function	Range	Defaults	Type
15	Jog reference	0 to 400.0 Hz	1.5	RW

Defines the jog speed

No	Function	Range	Defaults	Type
16	Analog input 1 mode	0-20, 20-0, 4-20, 20-4, 4-.20, 20-.4, VoLt	4-.20	RW

Determines the input on terminal T2

0-20: Current input 0 to 20mA (20mA full scale)
20-0: Current input 20 to 0mA (0mA full scale)
4-20: Current input 4 to 20mA with current loop loss (cL1) trip (20mA full scale)
20-4: Current input 20 to 4mA with current loop loss (cL1) trip (4mA full scale)
4-.20: Current input 4 to 20mA with no current loop loss (cL1) trip (20mA full scale)
20-.4: Current input 20 to 4mA with no current loop loss (cL1) trip (4mA full scale)
VoLt: 0 to 10V input

NOTE In the 4-20 or 20-4mA modes (with current loop loss) the drive will trip on cL1 if the input reference is below 3mA. Also, if the drive trips on cL1, the voltage analog input cannot be selected.

NOTE If both analog inputs (A1 and A2) are to be set-up as voltage inputs, and if the potentiometers are supplied from the drive's +10V rail (terminal T3), they must have a resistance >4kΩ each.

No	Function	Range	Defaults	Type
17	Enable negative preset speeds	OFF or On	OFF	RW

OFF: Direction of rotation controlled by run forward and run reverse terminals
On: Direction of rotation controlled by preset speed values (use run forward terminal) or keypad reference.

No	Function	Range	Defaults	Type
18	Preset speed 1	±1500 Hz (Limited by setting of Pr **02** *Maximum set speed*)	0.0	RW
19	Preset speed 2			
20	Preset speed 3			
21	Preset speed 4			

Defines preset speeds 1 to 4.

No	Function	Range	Defaults	Type
22	Load display units	Ld, A	Ld	RW

Ld: Active current as a % of motor rated active current
A: Drive output current per phase in Amps

No	Function	Range	Defaults	Type
23	Speed display units	Fr, SP, Cd	Fr	RW

Fr: Drive output frequency in Hz
SP: Motor speed in rpm
Cd: Machine speed in customer defined units (See Pr **24**).

No	Function	Range	Defaults	Type
24	Customer defined scaling	0 to 9.999	1.000	RW

Multiplying factor on motor speed (rpm) to give customer defined units.

No	Function	Range	Defaults	Type
25	User security code	0 to 999	0	RW

Used to set-up a user security code. See section 5.6 *Security codes* on page 50.

No	Function	Range	Defaults	Type
26	Not used			

No	Function	Range	Defaults	Type
27	Power up keypad reference	0, LASt, PrS1	0	RW

0: keypad reference is zero
LASt: keypad reference is last value selected before the drive was powered down
PrS1: keypad reference is copied from preset speed 1

No	Function	Range	Defaults	Type
28	Parameter copying	no, rEAd, Prog, boot	no	RW

no: no action
rEAd: program the drive with the contents of the SmartStick
Prog: program the SmartStick with the current drive settings
boot: SmartStick becomes read only. The contents of the SmartStick will be copied to the drive every time the drive is powered up.

NOTE Before setting boot mode, the current drive settings must be stored in the SmartStick by using Prog mode, otherwise the drive will trip on C.Acc at power-up.
Parameter copying is initiated by pressing the Ⓜ MODE key on exit from parameter edit mode after Pr **28** has been set to rEAd, Prog or boot.

NOTE If parameter copying is enabled when no SmartStick is installed in the drive, the drive will trip on C.Acc.

NOTE The SmartStick can be used to copy parameters between drives of different ratings. Certain drive dependant parameters will be stored on the SmartStick but will not be copied to the drive.
The drive will trip on C.rtg when being written to by a copied parameter set of a different drive rating.
The drive dependant parameters are: Pr **06** Motor rated current, Pr **08** Motor rated voltage, Pr **09** Motor power factor and Pr **37** Maximum switching frequency.

NOTE Before the SmartStick /LogicStick is written to using Prog, the SmartStick/LogicStick will need to be inserted into the drive at power up or a reset command performed when the drive has been powered up, otherwise the drive will trip on C.dAt when Prog command executed.

NOTE For best motor performance, an autotune should be carried out after parameter copying has taken place.

NOTE When copying between drives of different ratings, bit parameters will not be copied.

No	Function	Range	Defaults	Type
29	Load defaults	no, Eur, USA	no	RW

no: defaults are not loaded
Eur: 50Hz default parameters are loaded
USA: 60Hz default parameters are loaded

Default parameters are set by pressing the (M) MODE key on exit from parameter edit mode after Pr **29** has been set to Eur or USA.
When default parameters have been set, the display will return to Pr **01** and Pr **10** will be reset to L1.

NOTE The drive must be in a disabled, stopped or tripped condition to allow default parameters to be set. If default parameters are set while the drive is running, the display will flash FAIL once before changing back to no.

WARNING Disconnect the electro-mechanical brake circuit before a default is performed.

No	Function	Range	Defaults	Type
30	Ramp mode select	0 to 3	1	RW

0: Fast ramp selected
1: Standard ramp with normal motor voltage selected
2: Standard ramp with high motor voltage selected
3: Fast ramp with high motor voltage selected

Fast ramp is linear deceleration at programmed rate, normally used when a braking resistor is installed.

Standard ramp is controlled deceleration to prevent DC bus over-voltage trips, normally used when there is no braking resistor installed.
If a high motor voltage mode is selected, deceleration rates can be faster for a given inertia but motor temperatures will be higher.

NOTE When standard ramp mode is used, the output frequency can be increased by 20% during deceleration.

No	Function	Range	Defaults	Type
31	Stop mode select	0 to 4	1	RW

0: Coast to stop selected
1: Ramp to stop selected
2: Ramp to stop with 1 second DC injection braking
3: DC injection braking with detection of zero speed
4: Timed DC injection braking
See the *Commander SK Advanced User Guide*.

No	Function	Range	Defaults	Type
32	Dynamic V to f select	OFF or On	OFF	RW

OFF: Fixed linear voltage to frequency ratio (constant torque - standard load)
On: Voltage to frequency ratio dependant on load current. This gives a higher motor efficiency.

No	Function	Range	Defaults	Type
33	Catch a spinning motor select	0 to 3	0	RW

0: Disabled
1: Detect positive and negative frequencies
2: Detect positive frequencies only
3: Detect negative frequencies only
If the drive is to be configured in fixed boost mode (Pr **41** = Fd or SrE) with catch a spinning motor software enabled, an autotune (see Pr **38** on page 65) must be carried out to measure the motor's stator resistance beforehand. If a stator resistance is not measured, the drive may trip on OV or OI.AC while trying to catch a spinning motor.

No	Function	Range	Defaults	Type
34	Terminal B7 mode select	dig, th, Fr, Fr.hr	dig	RW

dig: Digital input
th: Motor thermistor input, connect as per diagram below
Fr: Frequency input. See *Commander SK Advanced User Guide*.
Fr.hr: High resolution frequency input. See *Commander SK Advanced User Guide*.

Figure 6-11

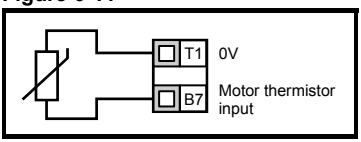

Trip resistance: 3kΩ
Reset resistance: 1k8

NOTE If Pr **34** is set to th so that terminal B7 is used as a motor thermistor, the functionality of terminal B7 as set-up with Pr **05**, drive configuration, will be disabled. Analog reference 2 will no longer be selected as the speed reference. Analog reference 1 should be used.

NOTE When Pr **34** is set to th, the mode button will need to be pressed four times to return the drive display to status mode.

No	Function	Range	Defaults	Type
35	Digital output control (terminal B3)	n=0, At.SP, Lo.SP, hEAL, Act, ALAr, I.Lt, At.Ld, USEr	n=0	RW

n=0: At zero speed
At.SP: At speed
Lo.SP: At minimum speed
hEAL: Drive ok
Act: Drive active
ALAr: General drive alarm
I.Lt: Current limit active
At.Ld: At 100% load
USEr: User programmable

NOTE This parameter is automatically changed by the setting of Pr **12.** When Pr **12** automatically controls the setting of this parameter, this parameter cannot be changed.

NOTE A change to Pr **35** is set by pressing the Ⓜ MODE key on exit from parameter edit mode. See the *Commander SK Advanced User Guide*.

NOTE Terminal B3 can also be configured as a digital input, frequency output or PWM output. Refer to the *Commander SK Advanced User Guide*. for more information.

No	Function	Range	Defaults	Type
36	Analog output control (terminal B1)	Fr, Ld, A, Por, USEr	Fr	RW

Fr: Voltage proportional to motor speed
Ld: Voltage proportional to motor load
A: Voltage proportional to output current
Por: Voltage proportional to output power
USEr: User programmable

NOTE A change to Pr **36** is set by pressing the Ⓜ MODE key on exit from parameter edit mode. See the *Commander SK Advanced User Guide*..

No	Function	Range	Defaults	Type
37	Maximum switching frequency	3, 6, 12	3	RW

3: 3kHz
6: 6kHz
12: 12kHz

Drive size	Voltage rating	3kHz	6kHz	12kHz
2	All	√	√	√
3	SK320X	√	√	√
	SK3401 & SK3402	√	√	√
	SK3403	√	√	√
	SK350X	√	√	
4	All	√	√	
5	All	√	√	
6	All	√	√	

See the *Commander SK Technical Data Guide* for drive derating data.

No	Function	Range	Defaults	Type
38	Autotune	0 to 2	0	RW

0: No autotune
1: Non-rotating static autotune
2: Rotating autotune

WARNING

When a rotating autotune is selected, the drive will accelerate the motor up to $^{2}/_{3}$ maximum speed in Pr **02**. Once a rotating autotune has been initiated (Pr **38** set to 2) on Commander SK, it must be completed before the drive will operate normally. If the rotating auto-tune is not completed (through the drive being disabled or a trip occuring), the drive will only run at the autotune speed (2/3 rated speed reference) when the drive is asked to run again.

NOTE The motor must be at a standstill before a non-rotating autotune is initiated.

NOTE The motor must be at a standstill and unloaded before a rotating autotune is initiated.

No	Function	Range	Defaults	Type
39	Motor rated frequency	0.0 to 1500.0 Hz	Eur: 50.0, USA: 60.0	RW

Enter the motor rated frequency (taken from the motor name plate). This defines the voltage to frequency ratio applied to the motor.

No	Function	Range	Defaults	Type
40	Number of motor poles	Auto, 2P, 4P, 6P, 8P	Auto	RW

Auto: Automatically calculates the number of motor poles from the settings of Pr **07** and Pr **39**
2P: Set for a 2 pole motor
4P: Set for a 4 pole motor
6P: Set for a 6 pole motor
8P: Set for an 8 pole motor

No	Function	Range	Defaults	Type
41	Voltage mode select	Ur S, Ur, Fd, Ur A, Ur I, SrE	Eur: Ur I, USA: Fd	RW

Ur S: Stator resistance is measured each time the drive is enabled and run
Ur: No measurement is taken
Fd: Fixed boost
Ur A: Stator resistance is measured the first time the drive is enabled and run
Ur I: Stator resistance measured at each power-up when the drive is enabled and run
SrE: Square law characteristic
In all Ur modes, the drive operates in open loop vector mode.

NOTE The drive default setting is Ur I mode which means that the drive will carry out an autotune every time the drive is powered-up and enabled. If the load is not going to be stationary when the drive is powered-up and enabled, then one of the other modes should be selected. Not selecting another mode could result in poor motor performance or OI.AC, It.AC or OV trips.

No	Function	Range	Defaults	Type
42	Low frequency voltage boost	0.0 to 50.0 %	Eur: 3.0, USA: 1.0	RW

Determines the boost level when Pr **41** is set to Fd or SrE.

No	Function	Range	Defaults	Type
43	Serial communications baud rate	2.4, 4.8, 9.6, 19.2, 38.4	19.2	RW

2.4: 2400 baud
4.8: 4800 baud
9.6: 9600 baud
19.2: 19200 baud
38.4: 38400 baud

No	Function	Range	Defaults	Type
44	Serial comms address	0 to 247	1	RW

Defines the unique address for the drive for the serial interface.

No	Function	Range	Defaults	Type
45	Software version	1.00 to 99.99		RO

Indicates the version of software installed to the drive.

Pr 46 to Pr 51 appear when Pr 12 is set to control a motor brake

No	Function	Range	Defaults	Type
46	Brake release current threshold	0 to 200 %	50	RW
47	Brake apply current threshold		10	

Defines the brake release and brake apply current thresholds as a % of motor current.
If the frequency is >Pr **48** and the current is >Pr **46**, the brake release sequence is started.
If the current is <Pr **47**, the brake is applied immediately.

No	Function	Range	Defaults	Type
48	Brake release frequency	0.0 to 20.0 Hz	1.0	RW
49	Brake apply frequency		2.0	

Defines the brake release and brake apply frequencies.
If the current is >Pr **46** and the frequency is > Pr **48**, the brake release sequence is started.
If the frequency is <Pr **49** and the drive has been commanded to stop, the brake is applied immediately.

No	Function	Range	Defaults	Type
50	Pre-brake release delay	0.0 to 25.0 s	1.0	RW

Defines the time between the frequency and load condition being met and the brake being released. The ramp is held during this time.

No	Function	Range	Defaults	Type
51	Post brake release delay	0.0 to 25.0 s	1.0	RW

Defines the time between the brake being released and the ramp hold being released.

WARNING

The brake control functions are provided to allow well co-ordinated operation of an external brake with the drive. While both hardware and software are designed to high standards of quality and robustness, they are not intended for use as safety functions, i.e. where a fault or failure would result in a risk of injury. In any application where the incorrect operation of the brake release mechanism could result in injury, independent protection devices of proven integrity must also be incorporated.

Figure 6-12 Brake function diagram

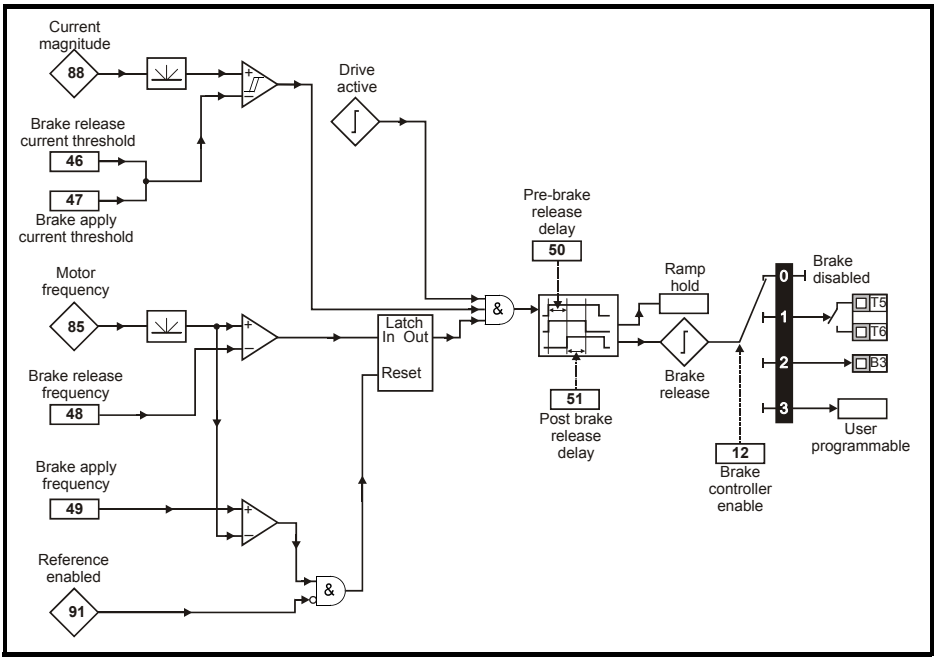

Figure 6-13 Brake sequence

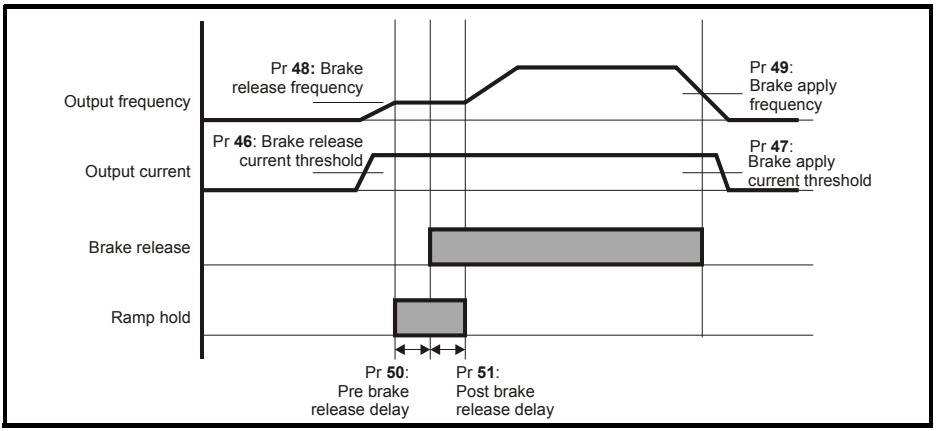

Pr 52 to Pr 54 appear when a Solutions Module is installed to the drive

No	Function	Range	Defaults	Type
52	*Solutions Module dependant		0	RW

No	Function	Range	Defaults	Type
53	*Solutions Module dependant		0	RW

No	Function	Range	Defaults	Type
54	*Solutions Module dependant		0	RW

*See the *Commander SK Advanced User Guide* for further information.

No	Function	Range	Defaults	Type
55	Last trip		0	RO
56	Trip before Pr **55**			
57	Trip before Pr **56**			
58	Trip before Pr **57**			

Indicates the last 4 trips of the drive.

No	Function	Range	Defaults	Type
59	PLC ladder program enable	0 to 2	0	RW

The PLC ladder program enable is used to start and stop the PLC ladder program.

0: Stop the PLC ladder program

1: Run the PLC ladder program (trip drive if LogicStick is not installed). Any out-of-range parameter writes attempted will be limited to the maximum/minimum values valid for that parameter before being written to.

2: Run the PLC ladder program (trip drive if LogicStick is not installed). Any out-of-range parameter writes attempted will cause the drive to trip.

See the *Commander SK Advanced User Guide* for details on PLC ladder programming.

No	Function	Range	Defaults	Type
60	PLC ladder program status	-128 to +127		RO

The PLC ladder program status parameter indicates the actual state of the PLC ladder program.

-n: PLC ladder program caused a drive trip due to an error condition while running rung n. Note that the rung number is shown on the display as a negative number.

0: LogicStick is installed with no PLC ladder program

1: LogicStick is installed, PLC ladder program is installed but stopped

2: LogicStick is installed, PLC ladder program is installed and running

3: LogicStick is not installed

No	Function	Range	Defaults	Type
61 to 70	Configurable parameter 1 to configurable parameter 10	As source		

Pr **61** to Pr **70** and Pr **71** to Pr **80** can be used to access and adjust advanced parameters.

Example: It is desired that Pr **1.29** (*Skip frequency 1*) is to be adjusted. Set one of the parameters Pr **71** to Pr **80** to 1.29, the value of Pr **1.29** will appear in the corresponding parameter from Pr **61** to Pr **70**. I.e. if Pr **71** is set to 1.29, Pr **61** will contain the value of Pr **1.29** where it can be adjusted.

NOTE Some parameters are only implemented if the drive is disabled, stopped or tripped and the STOP/RESET key is pressed for 1s.

See *Commander SK Advanced User Guide* for advanced parameter details.

6.3 Parameter descriptions - Level 3

No	Function	Range	Defaults	Type
71 to 80	Pr **61** to Pr **70** set up	0 to Pr **21.51**		RW

Set Pr **71** to Pr **80** to the required advanced parameter number to be accessed.
The value within these parameters will be displayed in Pr **61** to Pr **70**. Pr **61** to Pr **70** can then be adjusted to change the value within a parameter.
See *Commander SK Advanced User Guide* for further details.

6.4 Diagnostic parameters

The following read only (RO) parameters can be used as an aid to fault diagnosis on the drive. See Figure 8-1 *Diagnostics logic diagram* on page 76.

No	Function	Range	Type
81	Frequency reference selected	±Pr **02** Hz	RO
82	Pre-ramp reference	±Pr **02** Hz	RO
83	Post-ramp reference	±Pr **02** Hz	RO
84	DC bus voltage	0 to Drive maximum Vdc	RO
85	Motor frequency	±Pr **02** Hz	RO
86	Motor voltage	0 to Drive rating V	RO
87	Motor speed	±9999 rpm	RO
88	Motor current	+Drive maximum A	RO
89	Motor active current	±Drive maximum A	RO
90	Digital I/O read word	0 to 95	RO
91	Reference enabled indicator	OFF or On	RO
92	Reverse selected indicator	OFF or On	RO
93	Jog selected indicator	OFF or On	RO
94	Analog input 1 level	0 to 100 %	RO
95	Analog input 2 level	0 to 100 %	RO

7 Quick start commissioning

This procedure is written from default parameter settings as the drive would be delivered from the factory.

For European default settings refer to section 7.1 *Terminal control* . For USA default settings refer to section 7.2 *Keypad control* on page 72.

7.1 Terminal control

Figure 7-1 Minimum required control terminal connections

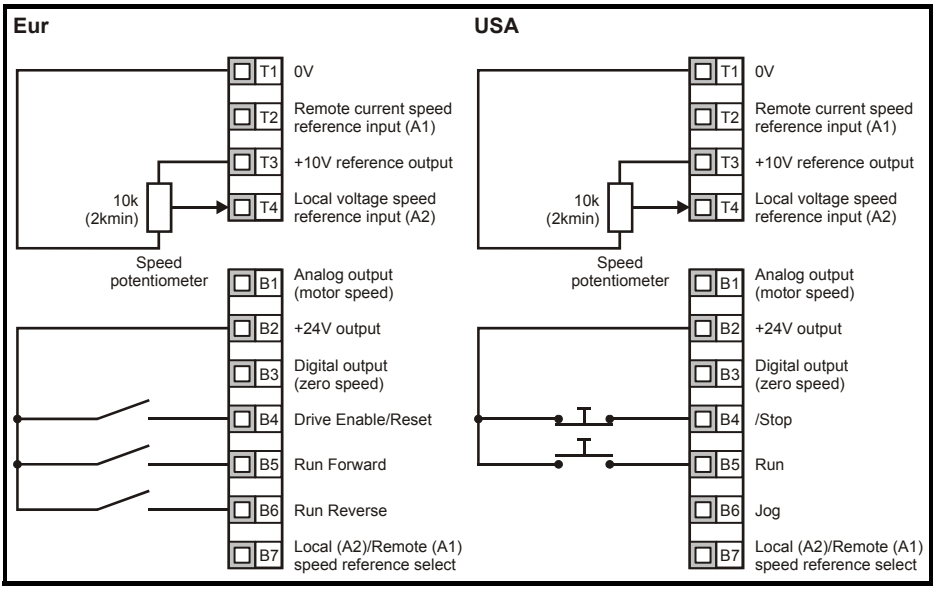

Terminal B7 open: Local voltage speed reference (A2) selected

Action	Detail	
Before power up	Ensure: • The drive enable signal is not given, terminal B4 is open • The run signal is not given, terminal B5/B6 is open • The motor is connected to the drive • The motor connection is correct for the drive Δ or Y • The correct supply voltage is connected to the drive	
Power up the drive	Ensure: • The drive displays: rh 0.0	
Enter minimum and maximum speeds	Enter: • Minimum speed Pr **01** (Hz) • Maximum speed Pr **02** (Hz)	Pr 02 Pr 01 t
Enter acceleration and deceleration rates	Enter: • Acceleration rate Pr **03** (s/100Hz) • Deceleration rate Pr **04** (s/100Hz)	100Hz Pr 03 Pr 04 t
Enter motor nameplate details	Enter: • Motor rated current in Pr **06** (A) • Motor rated speed in Pr **07** (rpm) • Motor rated voltage in Pr **08** (V) • Motor rated power factor in Pr **09** • If the motor is not a standard 50/60Hz motor, set Pr **39** accordingly	Mot X XXXXXXXXX No XXXXXXXXX kg IP55 I.cl F °C 40 S 1 V Hz min kW cosφ A 230 50 1445 2.20 0.80 8.50 400 4.90 CN = 14.5Nm 240 50 1445 2.20 0.76 8.50 415 4.90 CN = 14.4Nm CTP- VEN 1PHASE 1+0.46A.P+110W R.F 32MIN MADE IN EU
Ready to autotune		
Enable and run the drive	Close: • The Enable and Run Forward or Run Reverse signals	
Autotune	The Commander SK will carry out a non-rotating autotune on the motor. The motor must be stationary to carry out an autotune correctly. The drive will carry out a non-rotating autotune every time it is first started after each power-up. If this will cause a problem for the application, set Pr **41** to the required value.	cos ∅ R_s σL_s
Autotune complete	When the autotune has been completed, the display will show: Fr 0.0	
Ready to run		
Run	The drive is now ready to run the motor.	
Increasing and decreasing speed	Turning the speed potentiometer will increase and decrease the speed of the motor.	
Stopping	To stop the motor under ramp control, open either the run forward or run reverse terminal. If the enable terminal is opened while the motor is running, the motor will coast to a stop.	

7.2 Keypad control

Figure 7-2 Minimum required control terminal connections

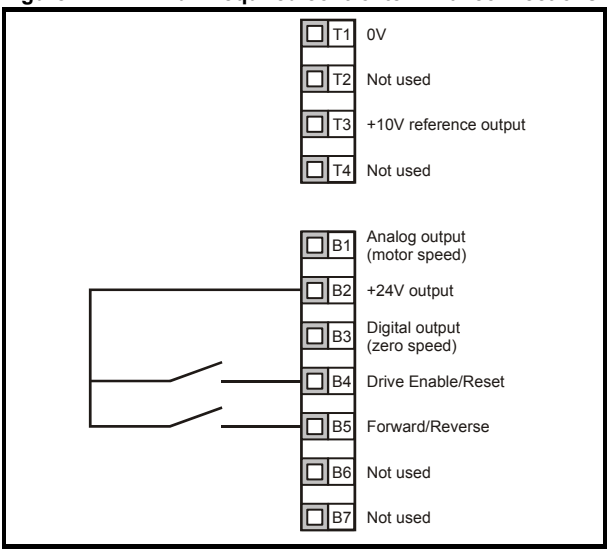

NOTE To implement a Forward/Reverse switch from the drive's display:

- Set Pr **71** to 8.23
- Set Pr **61** to 6.33
- Press the STOP/RESET key

Terminal B5 will now be set-up as a Forward/Reverse terminal.

Action	Detail	
Before power up	Ensure: • The drive enable signal is not given, terminal B4 is open • The motor is connected to the drive • The motor connection is correct for the drive Δ or Y • The correct supply voltage is connected to the drive	
Power up the drive	Ensure: • The drive displays: rdy 0.0	
Enter minimum and maximum speeds	Enter: • Minimum speed Pr **01** (Hz) • Maximum speed Pr **02** (Hz)	Pr 02 Pr 01 t
Enter acceleration and deceleration rates	Enter: • Acceleration rate Pr **03** (s/100Hz) • Deceleration rate Pr **04** (s/100Hz)	100Hz Pr 03 Pr 04 t
Set keypad control	Enter: • **PAd** into Pr **05**	
Enter motor nameplate details	Enter: • Motor rated current in Pr **06** (A) • Motor rated speed in Pr **07** (rpm) • Motor rated voltage in Pr **08** (V) • Motor rated power factor in Pr **09** • If the motor is not a standard 50/60Hz motor, set Pr **39** accordingly	Mot X XXXXXXXXX No XXXXXXXXXX kg IP55 cl F IC 01 A 51 V Hz rpm kW cos A Δ 230 / Y 400 50 1445 2.20 0.80 8.50 / 4.90 CN = 14.5Nm Δ 240 / Y 415 50 1445 2.20 0.76 8.50 / 4.90 CN = 14.4Nm CTP: VEN 1PHASE 1~0.4kW-P=100W B.F.3/8MN UC X 1/1/1
Ready to autotune		
Enable and run the drive	Close: • The enable signal • Press the START key	
Autotune	The Commander SK will carry out a non-rotating autotune on the motor. The motor must be stationary to carry out an autotune correctly. The drive will carry out a non-rotating autotune every time it is first started after each power-up. If this will cause a problem for the application, set Pr **41** to the required value.	cos ∅ R_s rL_s
Autotune complete	When the autotune has been completed, the display will show: Fr 0.0	
Ready to run		
Run	The drive is now ready to run the motor.	
Increasing and decreasing speed	Press the UP key to increase the speed Press the DOWN key to decrease the speed	
Stopping	Press the STOP/RESET key to stop the motor	

8 Diagnostics

WARNING

Do not attempt to carry out internal repairs. Return a faulty drive to the supplier for repair.

Trip code	Condition	Possible cause
UV	DC bus under voltage	Low AC supply voltage Low DC bus voltage when supplied by an external DC power supply
OV	DC bus over voltage	Deceleration rate set too fast for the inertia of the machine. Mechanical load driving the motor
OI.AC**	Drive output instantaneous over current	Insufficient ramp times Phase to phase or phase to ground short circuit on the drives output Drive requires autotuning to the motor Motor or motor connections changed, re-autotune drive to motor
OI.br**	Braking resistor instantaneous over current	Excessive braking current in braking resistor Braking resistor value too small
O.SPd	Over speed	Excessive motor speed (typically caused by mechanical load driving the motor)
tunE	Autotune stopped before completion	Run command removed before autotune complete
It.br	I^2t on braking resistor	Excessive braking resistor energy
It.AC	I^2t on drive output current	Excessive mechanical load High impedance phase to phase or phase to ground short circuit at drive output Drive requires re-autotuning to motor
O.ht1	IGBT over heat based on drives thermal model	Overheat software thermal model
O.ht2	Over heat based on drives heatsink	Heatsink temperature exceeds allowable maximum
th	Motor thermistor trip	Excessive motor temperature
O.Ld1*	User +24V or digital output overload	Excessive load or short circuit on +24V output
O.ht3	Drive over-heat based on drives thermal model	Overheat software thermal model
O.ht4	Power module rectifier over temperature.	Power module rectifier temperature exceeds allowable maximum
cL1	Analog input 1 current mode, current loss	Input current less than 3mA when 4-20 or 20-4mA modes selected
SCL	Serial communications loss time-out	Loss of communication when drive is under remote control
EEF	Internal drive EEPROM trip	Possible loss of parameter values (set default parameters (see Pr **29** on page 62))
PH	Input phase imbalance or input phase loss	One of the input phases has become disconnected from the drive (not dual rated drives)
rS	Failure to measure motors stator resistance	Motor too small for drive Motor cable disconnected during measurement
C.dAt	SmartStick data does not exist	New/empty SmartStick being read
C.Acc	SmartStick read/write fail	Bad connection or faulty SmartStick

Trip code	Condition	Possible cause
C.rtg	SmartStick/drive rating change	Already programmed SmartStick read by a drive of a different rating
O.cL	Overload on current loop input	Input current exceeds 25mA
HFxx trip	Hardware faults	Internal drive hardware fault (see *Commander SK Advanced User Guide*)

* The Enable/Reset terminal will not reset an O.Ld1 trip. Use the ◉ Stop/Reset key.

** These trips cannot be reset for 10 seconds after they occur.

See the *Commander SK Advanced User Guide* for further information on possible causes of drive trips.

Table 8-1 DC bus voltages

Drive voltage rating	UV trip level	UV reset level *	Braking level	OV trip level **
200V	175	215	390	415
400V	330	425	780	830
575V	435	590	930	990
690V	435	590	1120	1190

NOTE * These are the absolute minimum DC voltages the drives can be supplied by.
** The drive will trip on OV if the DC Bus goes above the OV trip level.

Table 8-2 Alarm warnings/Display indications

Display	Condition	Solution
OVL.d	I x t overload (I = current, t = time)	Reduce motor current (Load)
hot	Heatsink/IGBT temperature high	Reduce ambient temperature or reduce motor current
br.rS	Braking resistor overload	See Menu 10 in the *Commander SK Advanced User Guide*
AC.Lt	Drive is in current limit	See Menu 10 in the *Commander SK Advanced User Guide*
FAIL	Failed attempt to read stick	An attempt was made to read the stick when the drive was not disabled or tripped, or the stick is read only

NOTE If no action is taken when an alarm warning appears, the drive will trip on the appropriate fault code.

Figure 8-1 Diagnostics logic diagram

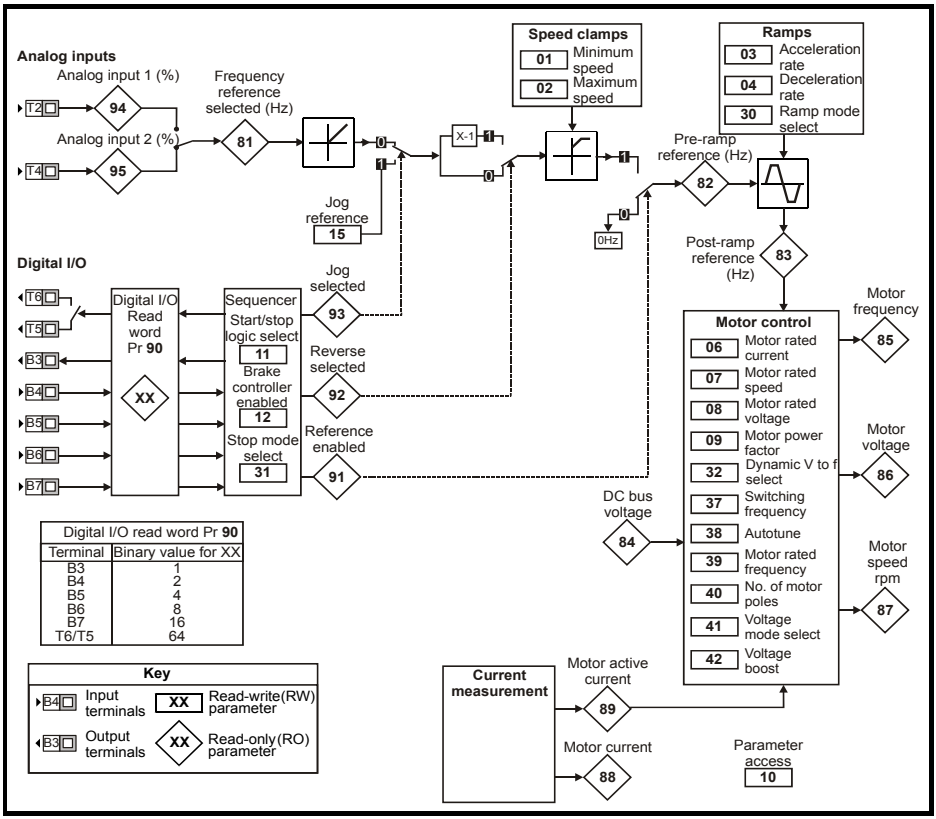

Cooling fan control

The cooling fan on a Commander SK size 2 is a dual speed fan and on sizes 3 to 6, it is a variable speed fan. The drive controls the speed at which the fan runs based on the temperature of the drives heatsink and also the drive's thermal model system. The cooling fan on Commander SK size 6 is a variable speed fan which requires an external +24Vdc power supply.

See section 4.2 *Heatsink fan* on page 38.

9 Options

Option name	Function	Picture
SmartStick	Upload drive parameters to the SmartStick for storage or for easy set-up of identical drives or downloading to replacement drives	
LogicStick	The LogicStick plugs into the front of the drive and enables the user to program PLC functions within the drive The LogicStick can also be used as a SmartStick (now supplied with LogicStick Guard)	
LogicStick Guard Kitbag	The LogicStick guard protects the Logicstick when installed to a drive. Available in a bag of 25	
SM-I/O Lite	Additional input/output module without real time clock	
SM-I/O Timer	Additional input/output module with real time clock	
SM-I/O 120V	Additional input/output module conforming to IEC 1131-2 120Vac. 6 x digital inputs, 2 x relay outputs	
SM-I/O PELV	Isolated input/output to NAMUR NE37 specifications (for chemical industry applications)	
SM-I/O 24V Protected	Additional input/output module with overvoltage protection up to 48V. 2 x analog outputs, 4 x digital inputs/outputs, 3 x digital inputs, 1 x relay output	
SM-I/O 32	Extended I/O Interface	
SM-PROFIBUS-DP-V1	PROFIBUS-DP-V1 adapter for communication	
SM-DeviceNet	DeviceNet adapter for communication	
SM-CANopen	CANopen adapter for communication	
SM-INTERBUS	INTERBUS adapter for communication	
SM-Ethernet	Ethernet adapter for communication	
SM-LON	Lonworks adapter for communication	
SM-EtherCAT	EtherCAT adapter for communication	
SM-Keypad Plus	Remote panel mounting LCD multilingual text keypad display to IP54 and/or NEMA 12 with additional help key	
SK-Keypad Remote	Remote panel mounting LED display to IP65 and/or NEMA 12 with additional function key	
EMC filters	These additional filters are designed to operate together with the drive's own integral EMC filter in areas of sensitive equipment	
CT comms cable	Cable with isolation RS232 to RS485 converter. For connecting PC/Laptop to the drive when using CTSoft or SyPTLite	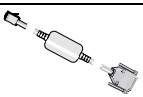
CT USB comms cable	Cable with isolation RS232 to RS485 converter. For connecting PC/Laptop to the drive when using CTSoft or SyPTLite	

Option name	Function	Picture
Conduit box	Top and bottom metal gland plates to allow the drive to comply with the requirements of UL type 1	
AC input line reactors	To reduce supply harmonics	
CTSoft	Software for PC or Laptop which allows the user to commission and store parameter settings	
SyPTLite	Software for PC or Laptop which allows the user to program PLC functions within the drive	
Braking resistor	Optional internal braking resistor for Commander SK size 2 (see Commander SK Technical Data Guide for further details).	

Details of all the above options can be found at www.controltechniques.com and on the CD supplied with the drive.

10 UL listing information

The Control Techniques UL file number is E171230. Confirmation of UL listing can be found on the UL website: www.ul.com.

10.1 Common UL information

Conformity

The drive conforms to UL listing requirements only when the following are observed:

- The drive is installed in a type 1 enclosure, or better, as defined by UL50
- The ambient temperature does not exceed 40°C (104°F) when the drive is operating
- The terminal tightening torques specified in section 3.6.1 *Terminal sizes and torque settings* on page 32.

Motor overload protection

The drive provides motor overload protection. The default overload protection level is no higher than 150% of full-load current (FLC) of the drive. It is necessary for the motor rated current to be entered into Pr **06** (or Pr **5.07**) for the protection to operate correctly. The protection level may be adjusted below 150% if required. The drive also provides motor thermal protection, refer to Pr **4.15**, Pr **4.19** and Pr **4.25** in the *Commander SK Advanced User Guide*.

Overspeed protection

The drive provides overspeed protection. However, it does not provide the level of protection afforded by an independent high integrity overspeed protection device.

10.2 Power dependant UL information

Conformity

The drive conforms to UL listing requirements only when the following is observed:

Fuses

Size 2 to 3

- The correct UL-listed high speed/fast acting fuses (class CC or class J up to 30A and class J above 30A), e.g. Bussman Limitron KTK series, Gould Amp-Trap ATM series or equivalent, are used in the AC supply. The drive does not comply with UL if MCBs are used in place of fuses.

For further details on fusing, refer to section 2.3 *Rating Data* on page 11.

Size 4 to 6

- The UL-listed Ferraz HSJ (High speed J class) fuses are used in the AC supply. The drive does not comply with UL if any other fuses or MCBs are used in place of those stated.

For further details on fusing, refer to section 2.3 *Rating Data* on page 11.

Field wiring

Size 2 to 4

- Class 1 60/75°C (140/167°F) copper wire only is used in the installation

Size 5 and 6

- Class 1 75°C (167°F) copper wire only is used in the installation

Field wiring connectors

Sizes 4 to 6

- UL listed wire connectors are used for terminating power circuit field wiring, e.g. Ilsco TA series

10.3 AC supply specification

The Commander SK is suitable for use in a circuit capable of delivering not more than 100,000rms symmetrical Amperes at 264Vac rms maximum (200V drives), 528Vac rms maximum (400V drives) or 600Vac rms maximum (575V and 690V drives).

10.4 Maximum continuous output current

The drive models are listed as having the maximum continuous output currents (FLC) shown in Table 10-1, Table 10-2, Table 10-3 and Table 10-4 (see the *Commander SK Technical Data Guide* for details).

Table 10-1 Maximum continuous output current (200V drives)

Model	FLC (A)	Model	FLC (A)
SK2201	15.5	SK4201	68
SK2202	22	SK4202	80
SK2203	28	SK4203	104
SK3201	42		
SK3202	54		

Table 10-2 Maximum continuous output current (400V drives)

Model	FLC (A)	Model	FLC (A)
SK2401	15.3	SK4401	68
SK2402	21	SK4402	83
SK2403	29	SK4403	104
SK2404	29	SK5401	138
SK3401	35	SK5402	168
SK3402	43	SK6401	205
SK3403	56	SK6402	236

Table 10-3 Maximum continuous output current (575V drives)

Model	FLC (A)	Model	FLC (A)
SK3501	5.4	SK3505	16
SK3502	6.1	SK3506	22
SK3503	8.4	SK3507	27
SK3504	11		

Table 10-4 Maximum continuous output current (690V drives)

Model	FLC (A)	Model	FLC (A)
SK4601	22	SK5601	84
SK4602	27	SK5602	99
SK4603	36	SK6601	125
SK4604	43	SK6602	144
SK4605	52		
SK4606	62		

10.5 Safety label

The safety label supplied with the connectors and mounting brackets must be placed on a fixed part inside the drive enclosure where it can be seen clearly by maintenance personnel for UL compliance.

The label clearly states “CAUTION Risk of Electric Shock Power down unit 10 minutes before removing cover”.

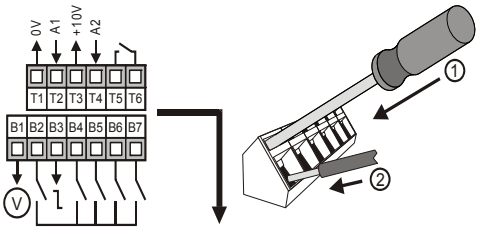
0V
A1
+10V
A2
T1 T2 T3 T4 T5 T6
B1 B2 B3 B4 B5 B6 B7
V
1
2

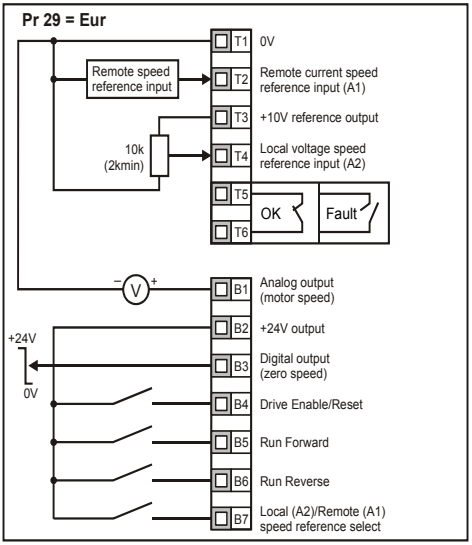
Pr 29 = Eur
Remote speed reference input
10k (2kmin)
T1 0V
T2 Remote current speed reference input (A1)
T3 +10V reference output
T4 Local voltage speed reference input (A2)
T5
T6
OK
Fault
V
B1 Analog output (motor speed)
B2 +24V output
B3 Digital output (zero speed)
B4 Drive Enable/Reset
B5 Run Forward
B6 Run Reverse
B7 Local (A2)/Remote (A1) speed reference select
+24V
0V

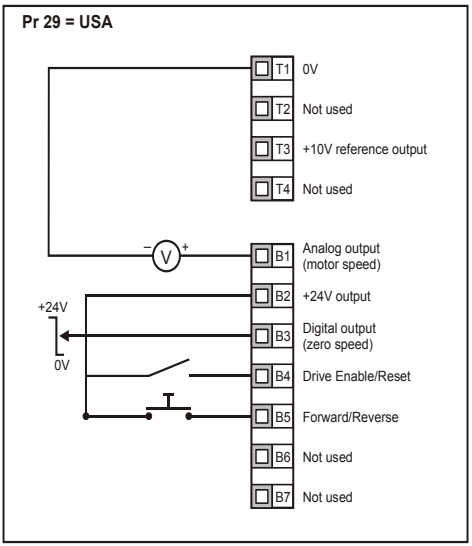
Pr 29 = USA
T1 0V
T2 Not used
T3 +10V reference output
T4 Not used
V
B1 Analog output (motor speed)
B2 +24V output
B3 Digital output (zero speed)
B4 Drive Enable/Reset
B5 Forward/Reverse
B6 Not used
B7 Not used
+24V
0V

0472-0064-08